VICINITY MAP

SCALE: 1 IN. = 500 FT.

GENERAL NOTES:

1. THIS IS LOT 11.2, BLOCK 1 IN SECTION 50.05 AS SHOWN ON THE VILLAGE OF NEW HEMPSTEAD TAX MAP.
2. AREA = 9.2885 ACRES
3. ZONE: 1R-40
4. PROPOSED USE: ACTIVE ADULT RESIDENTIAL COMMUNITY (ARC)
5. RECORD OWNERS: UNION VILLAGE LLC
   ONE EXECUTIVE BOULEVARD, SUITE 201
   SUFFERN, NY 10901
6. APPLICANT: UNION VILLAGE LLC
   ONE EXECUTIVE BOULEVARD, SUITE 201
   SUFFERN, NY 10901
7. FIRE DISTRICT: MOLESTON
8. SCHOOL DISTRICT: EAST RAMAPO CENTRAL
9. WATER DISTRICT: NR1
10. WATER SUPPLY: VEOLIA
11. SEWER DISTRICT: R C NO. 130 & 100
12. DATUM: USGS
13. BEFORE ANY WORK SHALL BE AUTHORIZED, A PRE-CONSTRUCTION MEETING (PCM) SHALL BE HELD ON-SITE WITH THE VILLAGE ENGINEER. AT SUCH TIME A FULL CONSTRUCTION SCHEDULE WILL BE REQUIRED AND STRICTLY ENFORCED. ANY CHANGES OR AMENDMENTS TO THE SCHEDULE MUST BE FILED WITH THE VILLAGE ENGINEER AS DIRECTED DURING PCM.
14. ALL UTILITIES UNDERGROUND, ELECTRIC SERVICE SHALL BE IN CONDUIT OF NOT LESS THAN TWO-INCH DIAMETER
15. THERE ARE NO CONVENANTS, DEED RESTRICTIONS, EASEMENT OR OTHER RESERVATIONS OF LAND RELATIVE TO THE SITE, EXCEPT AS SHOWN ON THIS PLAN, SUBJECT TO THE FINDINGS OF A COMPLETE AND UP-TO-DATE TITLE SEARCH.
16. NO SIGN(S) OTHER TAN THOSE SHOWN ON THESE DRAWING ARE PERMITTED WITHOUT PRIOR APPROVAL OF THE PLANNING BOARD. TENANTS ARE TO BE ADVISED OF THIS.
17. ALL CONSTRUCTION SHALL ADHERE TO ALL APPLICABLE NEW YORK STATE BUILDING CODES, AND CURRENT VILLAGE OF NEW HEMPSTEAD SPECIFICATIONS, WHICHEVER IS MORE STRINGENT.
18. ALL DRAWINGS AND PLANS, REQUIRED BY SUBJECTION B(1) OF THIS SECTION SHALL BE SIGNED AND SEALED/STAMPED BY NEW-YORK-STATE-LICENSED PROFESSIONAL ENGINEER, REGISTERED ARCHITECT LAND SURVEYOR, THE PROFESSION OF WHICH LICENSED SIGNATORY SHALL BE DETERMINED BY THE VILLAGE ENGINEER. ADDITIONALLY, PRIOR TO THE ISSUANCE OF A CERTIFICATE OF OCCUPANCY, AN AS-BUILT LANDSCAPING DRAWING SHALL BE SUBMITTED WHICH IS CERTIFIED LANDSCAPE ARCHITECT LICENSED TO PRACTICE IN THE STATE OF NEW YORK. SAID CERTIFIED LANDSCAPING DRAWING SHALL INDICATE DEGREE OF COMPLETION OF SAID LANDSCAPING IMPROVEMENTS IN ACCORDANCE WITH THE APPROVED SITE PLAN, SAID AS-BUILT DRAWINGS SHALL BE SUBMITTED TO THE BUILDING INSPECTOR, VILLAGE PLANNER AND VILLAGE ENGINEER FOR APPROVAL.
19. NO LAND DISTURBANCE ACTIVITIES WILL BE PERMITTED UNTIL ALL EROSION CONTROL MEASURES REQUIRED AS PART IF THE EROSION CONTROL PLAN ARE INSTALLED TO THE SATISFACTION OF THE VILLAGE ENGINEER.
20. ALL TRAFFIC SIGNS SHALL CONFORM TO NEW YORK STATE DEPARTMENT OF TRANSPORTATION MANUAL OF UNIFORM TRAFFIC CONTROL DEVICES.
21. IF ANY EXISTING TREES THAT ARE DESIGNATED TO REMAIN ON THESE PLANS ARE DESTROYED DURING CONSTRUCTION, OR OTHERWISE, THEY SHALL BE REPLACED IN KIND WITH A MINIMUM OF 1.5 TIMES THE CALIPER OF THE TREE REMOVED. MINIMUM CALIPER OF EACH INDIVIDUAL REPLACEMENT TREE SHELL BE FOUR INCHES.
22. INSTALLATION OF ALL UTILITIES AND SITE WORK SHALL BE IN CONFORMANCE WITH OSHA REGULATIONS.
23. RETAINING WALL OVER FOUR FEET IN HEIGHT SHALL BE DESIGNED AND INSPECTED BY A NEW-YORK-STATE-LICENSED PROFESSIONAL ENGINEER DURING INSTALLATION AND THE ADEQUACY OF THE RETAINING WALL SHALL BE CERTIFIED IN WRITING PRIOR TO THE ISSUANCE OF THE CERTIFICATE OF OCCUPANCY. WALLS HIGHER THAN FOUR FEET WILL ALSO REQUIRE A BARRIER FENCE ALONG TOP OF THE ENTIRE WALL.
24. IT IS THE RESPONSIBILITY OF THE OWNER AND CONTRACTOR(S) TO PROTECT A PROPERTY SITE, AND ITS PERIMETER, UNDER/DURING CONSTRUCTION IN ACCORDANCE WITH THE RELEVANT OSHA REGULATIONS, AS WELL AS THE CONTROLLING NEW YORK STATE AND LOCAL LAWS/REGULATIONS/CODES, AS DETERMINED BY THE VILLAGE'S ENGINEER, BUILDING INSPECTOR AND/OR THE GOVERNING VILLAGE BOARDS, IN ORDER TO MAINTAIN THE HEALTH AND SAFETY OF WORKERS AND THE GENERAL PUBLIC, AS WELL AS PREVENTING UNAUTHORIZED ACCESS, THE SAME NOT LIMITED TO REQUIRING A MINIMUM SIX-FOOT-HIGH TEMPORARY FENCE WITH A LOCKED GATE.
25. IT IS THE RESPONSIBILITY OF THE CONTRACTOR TO PROVIDE TEMPORARY FENCING TO PROTECT ANY AREA WITH AN EXCAVATION EXCEEDING FOUR FEET IN DEPTH IF LEFT UNATTENDED OVERNIGHT.
26. IN THE EVENT OF A UNPLANNED/UNSCHEDULED CONSTRUCTION INACTIVITY FOR DURATION GREATER THAN 30 CONSECUTIVE CALENDAR DAYS WITHOUT WRITTEN APPROVAL FROM THE VILLAGE ENGINEER, CODE ENFORCEMENT OFFICER OR BUILDING INSPECTOR, THE BOND ESTABLISHED FOR THE PROJECT UPON SITE PLAN APPROVAL MAY BE FORFEITED TO THE VILLAGE FOR SITE RESTORATION ENHANCEMENT ACTIVITIES AND A STOP-WORK ORDER WILL BE ISSUED FOR THE PROJECT UNTIL SUCH TIME THAT THE PREAUTHORIZES WORK UNDER THE PREVIOUS APPROVAL AND A NEW BOND IS PROVIDED.
27. THE APPLICATIONS TO THE PLANNING BROAD, ZONING BOARD OF APPEALS AND BOARD OF TRUSTEES, OF THE VILLAGE OF NEW HEMPSTEAD, AS MAY BE APPLICABLE, SHALL BE REVIEWED IN COMPLIANCE WITH ARTICLE 12-B OF NEW YORK STATE GENERAL MUNICIPAL LAW.
28. THE UNDERSIGNED, OWNER AND/OR APPLICANT, AS A CONDITION OF APPROVAL OF THIS SITE PLAN, HEREBY AGREES TO COMPLETE THE WITHIN SITE DEVELOPMENT PLAN AS DRAWN AND ALL IMPROVEMENTS SHOWN THEREON, AS A CONDITION OF THE ISSUANCE OF A BUILDING PERMIT. THE OWNER/APPLICANT IS AWARE THAT NO CHANGES IN THIS PLAN MAY BE MADE UNLESS APPROVED BY THE PLANNING BOARD.

APPLICANT _____ DATE _____

OWNER _____ DATE _____

OWNER _____ DATE _____

BULK REQUIREMENTS

ZONE 1R-40 / ARC	REQUIRED	PROPOSED
MINIMUM LOT AREA	2,000 SQ. FT.	9.2441 ACS.
MINIMUM LOT WIDTH	N/A	N/A
MINIMUM FRONT YARD	20 FT.	24 FT.
MINIMUM SIDE YARD	0 FT.	0 FT.
MINIMUM TOTAL SIDE YARDS	0 FT.	0 FT.
MINIMUM REAR YARD	10 FT.	10 FT.
MAXIMUM BUILDING HEIGHT	2 STORES/35 FT.	2 STORIES/35 FT.
MAXIMUM BUILDING COVERAGE	45%	23%
DENSITY PER ACRE	6 UNITS *	5.9 OR 6 UNITS = 55 UNITS TOTAL

* PER FORBEARANCE AGREEMENT RECORDED IN THE ROCKLAND COUNTY CLERK'S OFFICE, INSTR. 2007-44358.

NET LOT AREA CALCULATION:
GROSS LOT AREA = 404,608 SQ.FT.
LESS 25% OF SLOPES 25%+ = - 1,910 SQ.FT.
NET LOT AREA = 402,698 SQ.FT.

DENSITY CALCULATIONS:
9.2441 ACS. X 6 UNITS/AC. = 55.55 OR 55 UNITS

PARKING CALCULATIONS:
REQUIRED:
2 SPACES/UNIT

PROVIDED:
1 GARAGE SPACE
2 DRIVEWAY SPACE

GUEST PARKING:
REQUIRED:
PLANNING BOARD DETERMINATION

PROVIDED:
36 REGULAR SPACES
3 HANDICAP SPACES

TYPICAL UNIT LAYOUT

SCALE: 1"=30'

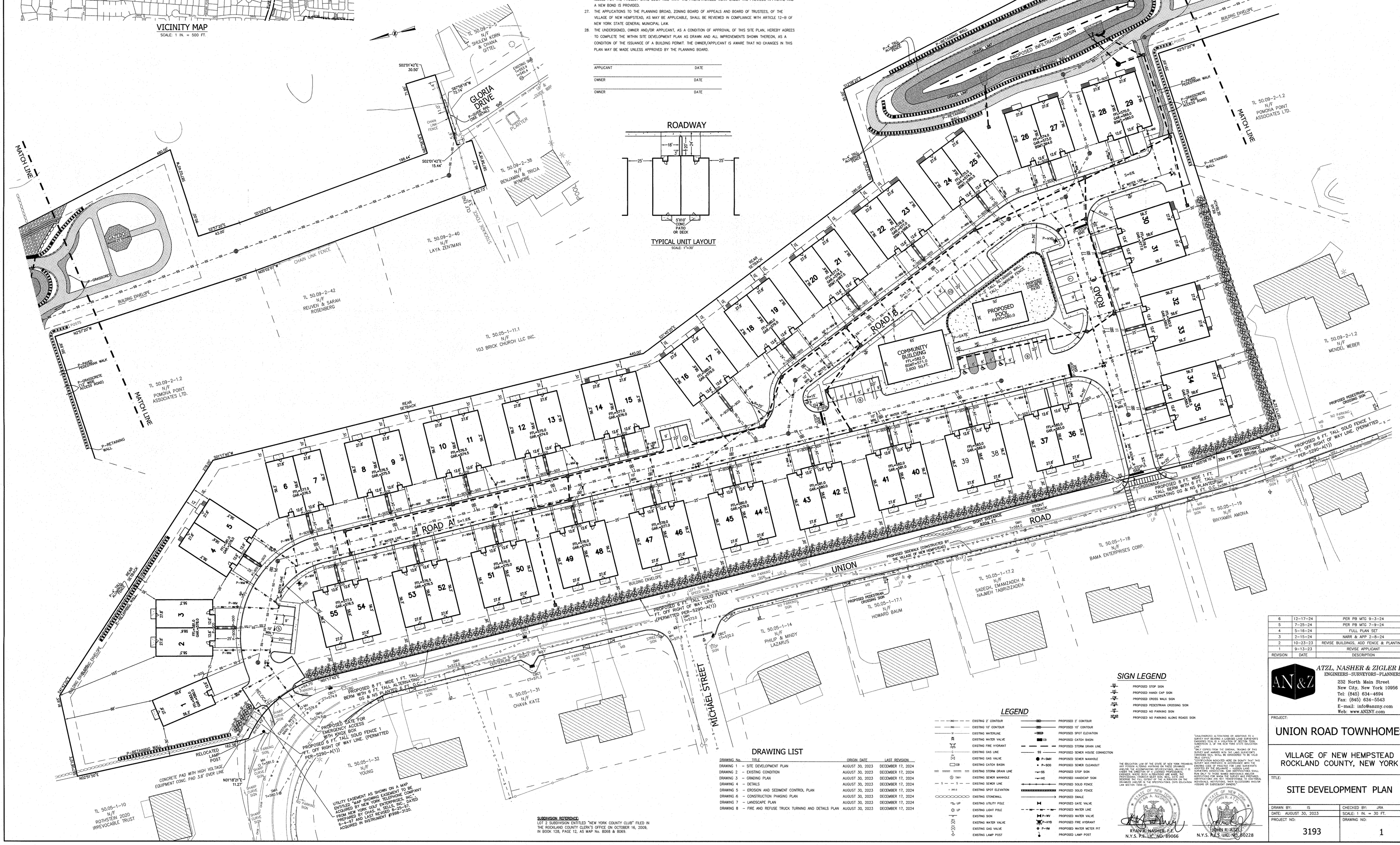

SUBDIVISION REFERENCE:
LOT 2 SUBDIVISION ENTITLED "NEW YORK COUNTY CLUB" FILED IN THE ROCKLAND COUNTY CLERK'S OFFICE ON OCTOBER 16, 2009, IN BOOK 128, PAGE 12, AS MAP No. 8068 & 8069.

LEGEND

EXISTING 2' CONTOUR	PROPOSED 2' CONTOUR
EXISTING 10' CONTOUR	PROPOSED 10' CONTOUR
EXISTING WATERLINE	PROPOSED SPOT ELEVATION
EXISTING WATER VALVE	PROPOSED CATCH BASIN
EXISTING FIRE HYDRANT	PROPOSED STORM DRAIN LINE
EXISTING GAS LINE	PROPOSED SEWER HOUSE CONNECTION
EXISTING GAS VALVE	PROPOSED SEWER MANHOLE
EXISTING CATCH BASIN	PROPOSED SEWER CLEANOUT
EXISTING STORM DRAIN LINE	PROPOSED STOP SIGN
EXISTING SEWER MANHOLE	PROPOSED HANDICAP SIGN
EXISTING SEWER LINE	PROPOSED SOLID FENCE
EXISTING SPOT ELEVATION	PROPOSED SOLID FENCE
EXISTING STONEWALL	PROPOSED SWALE
EXISTING UTILITY POLE	PROPOSED GATE VALVE
EXISTING LIGHT POLE	PROPOSED WATER LINE
EXISTING SIGN	PROPOSED WATER VALVE
EXISTING WATER VALVE	PROPOSED FIRE HYDRANT
EXISTING GAS VALVE	PROPOSED WATER METER PIT
EXISTING LAMP POST	PROPOSED LAMP POST

SIGN LEGEND

- PROPOSED STOP SIGN
- PROPOSED HANDI CAP SIGN
- PROPOSED CROSS WALK SIGN
- PROPOSED PEDESTRIAN CROSSING SIGN
- PROPOSED NO PARKING SIGN
- PROPOSED NO PARKING ALONG ROADS SIGN

DRAWING LIST

DRAWING No.	TITLE	ORIGIN DATE	LAST REVISION
DRAWING 1 —	SITE DEVELOPMENT PLAN	AUGUST 30, 2023	DECEMBER 17, 2024
DRAWING 2 —	EXISTING CONDITION	AUGUST 30, 2023	DECEMBER 17, 2024
DRAWING 3 —	GRADING PLAN	AUGUST 30, 2023	DECEMBER 17, 2024
DRAWING 4 —	DETAILS	AUGUST 30, 2023	DECEMBER 17, 2024
DRAWING 5 —	EROSION AND SEDIMENT CONTROL PLAN	AUGUST 30, 2023	DECEMBER 17, 2024
DRAWING 6 —	CONSTRUCTION PHASING PLAN	AUGUST 30, 2023	DECEMBER 17, 2024
DRAWING 7 —	LANDSCAPE PLAN	AUGUST 30, 2023	DECEMBER 17, 2024
DRAWING 8 —	FIRE AND REFUGE TRUCK TURNING AND DETAILS PLAN	AUGUST 30, 2023	DECEMBER 17, 2024

THE EDUCATION LAW OF THE STATE OF NEW YORK PROHIBITS THE ALTERATION OF ANY ITEM ON THIS DOCUMENT IN ANY WAY. ADDITIONALLY, ALTERATIONS, UNLESS IT IS UNDER THE DIRECTION OF A LICENSED PROFESSIONAL ENGINEER, ARCHITECT, LANDSCAPE ARCHITECT OR LAND SURVEYOR, THE PROFESSION OF WHICH THE SURVEY WAS PREPARED, DEGRADE THE FULL EXTENT OF THE ALTERATION ON THE SURVEY MAP OR PLAN. ALTERATIONS OVER EDUCATION LAW SECTION 7209 (2).

"UNAUTHORIZED ALTERATIONS OR ADDITIONS TO A SURVEY MAP BEARING A LICENSED LAND SURVEYOR'S SEAL ARE A VIOLATION OF SECTION 7209 (2) OF THE EDUCATION L.S. OF THE NEW YORK STATE EDUCATION LAW."

ONLY COPIES FROM THE ORIGINAL DRAWING OF THIS SURVEY MAP MARKED WITH THE LAND SURVEYOR'S EMBOSSED SEAL SHALL BE CONSIDERED TO BE VALID TRUE COPIES.

"CERTIFICATION INDICATED HERE ON SIGNIFY THAT THIS SURVEY WAS PREPARED IN ACCORDANCE WITH THE EXISTING CODE OF PRACTICE FOR LAND SURVEYS ADOPTED BY THE ASSOCIATED LAND SURVEYORS ASSOCIATIONS. SAID CERTIFICATIONS SHALL BEAR THE SIGNATURE AND ORIGINAL SEAL OF THE INDIVIDUAL LICENSED LAND SURVEYOR WHO PREPARED CERTIFICATIONS. ARE NOT TRANSFERABLE TO ADDITIONAL OR SUBSEQUENT OWNERS, GRANTEES, MORTGAGEES AND/OR ASSIGNS OR SUBSEQUENT OWNERS."

STATE OF NEW YORK — RYAN A. NASHER — 089066 — LICENSED PROFESSIONAL ENGINEER

RYAN A. NASHER, P.E.
N.Y.S. P.E. LIC. NO. 89066

STATE OF NEW YORK — JOHN R. ATZL — 50228 — LICENSED LAND SURVEYOR

JOHN R. ATZL
N.Y.S. L.S. LIC. NO. 50228

REVISION	DATE	DESCRIPTION
6	12-17-24	PER PB MTG 9-3-24
5	7-25-24	PER PB MTG 7-9-24
4	5-16-24	FULL PLAN SET
3	2-15-24	NARR & APP 2-8-24
2	10-23-23	REVISE BUILDINGS, ADD FENCE & PLANTINGS
1	9-13-23	REVISE APPLICANT

ATZL, NASHER & ZIGLER P.C.
ENGINEERS-SURVEYORS-PLANNERS
232 North Main Street
New City, New York 10956
Tel: (845) 634-4694
Fax: (845) 634-5543
E-mail: info@anzny.com
Web: www.ANZNY.com

PROJECT:

UNION ROAD TOWNHOMES

VILLAGE OF NEW HEMPSTEAD
ROCKLAND COUNTY, NEW YORK

TITLE:

SITE DEVELOPMENT PLAN

DRAWN BY: IS	CHECKED BY: JRA
DATE: AUGUST 30, 2023	SCALE: 1 IN. = 30 FT.
PROJECT NO: 3193	DRAWING NO: 1

P:\DRAWINGS\3193\3193 UNION ROAD TOWNHOMES & SURVEY 12-18-24.DWG

REVISION	DATE	DESCRIPTION
6	12-17-24	PER PB MTG 9-3-24
5	7-25-24	PER PB MTG 7-9-24
4	5-16-24	FULL PLAN SET
3	2-15-24	NARR & APP 2-8-24
2	10-23-23	REVISE BUILDINGS, ADD FENCE & PLANTINGS
1	9-13-23	REVISE APPLICANT

ATZL, NASHER & ZIGLER P.C.
ENGINEERS-SURVEYORS-PLANNERS
232 North Main Street
New City, New York 10956
Tel: (845) 634-4694
Fax: (845) 634-5543
E-mail: info@anzny.com
Web: www.ANZNY.com

PROJECT:

UNION ROAD TOWNHOMES

VILLAGE OF NEW HEMPSTEAD
ROCKLAND COUNTY, NEW YORK

TITLE:

EXISTING CONDITION

DRAWN BY: IS	CHECKED BY: JRA
DATE: AUGUST 30, 2023	SCALE: 1 IN. = 30 FT.
PROJECT NO: 3193	DRAWING NO: 2

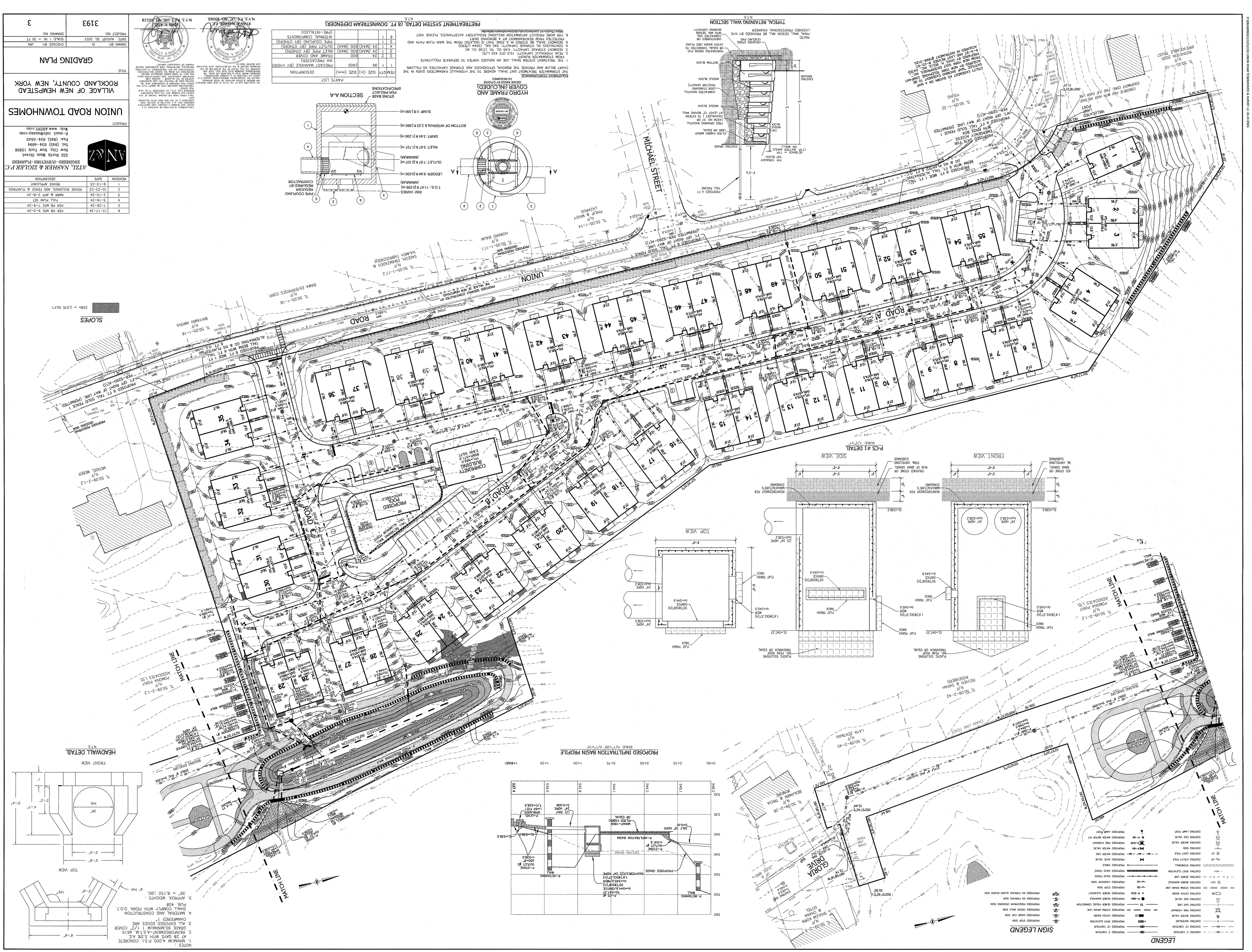
UNION ROAD TOWNHOMES & SURVEY 12-12-2-0.DWG
MICHAEL STREET
UNION ROAD
ROAD A
ROAD B
ROAD C
COMMUNITY BUILDING
PROPOSED POOL
MATCH LINE
PROPOSED INFILTRATION BASIN
PROPOSED INFILTRATION BASIN PROFILE
SCALE: H/1"=20' V/1"=10'
HEADWALL DETAIL
N.T.S.
TOP VIEW
FRONT VIEW
SLOPES
25% = 2,576 SQ.FT.
P-CS #1 DETAIL
SCALE: 1/2"=1'
SIDE VIEW
FRONT VIEW
TOP VIEW
GIORA DRIVE
LEGEND
SIGN LEGEND
HYDRO FRAME AND COVER (INCLUDED)
SECTION A-A
STONE BASE PER MANUFACTURER SPECIFICATIONS
PARTS LIST
PRETREATMENT SYSTEM DETAIL (8 FT. DOWNSTREAM DEFENDER)
N.T.S.
TYPICAL RETAINING WALL SECTION
N.T.S.
ARANG N. NASHER, P.E.
STATE OF NEW YORK
N.Y.S. P.E. LIC. NO. 89066
JOHN H. AZIZ
N.Y.S. P.E. LIC. NO. 80228
3193
3
PROJECT NO.
DRAWING NO.
DATE: AUGUST 30, 2023
SCALE: 1 IN. = 30 FT.
DRAWN BY: IS
CHECKED BY: JSA
GRADING PLAN
TITLE:
VILLAGE OF NEW HEMPSTEAD
ROCKLAND COUNTY, NEW YORK
UNION ROAD TOWNHOMES
PROJECT:
ATZL, NASHER & ZIGLER P.C.
ENGINEERS-SURVEYORS-PLANNERS
232 North Main Street
New City, New York 10956
Tel: (845) 634-1694
Fax: (845) 634-0543
E-mail: info@anzny.com
Web: www.ANZNY.com
REVISION | DATE | DESCRIPTION
1 | 9-1-23 | REVISE APPLICANT
2 | 10-23-23 | REVISE BUILDINGS, ADD FENCE & PLANTINGS
3 | 2-15-24 | MINOR & APPR 2-8-24
4 | 5-16-24 | FULL PLAN SET
5 | 7-25-24 | PER PB MTG 7-9-24
6 | 12-12-24 | PER PB MTG 9-3-24

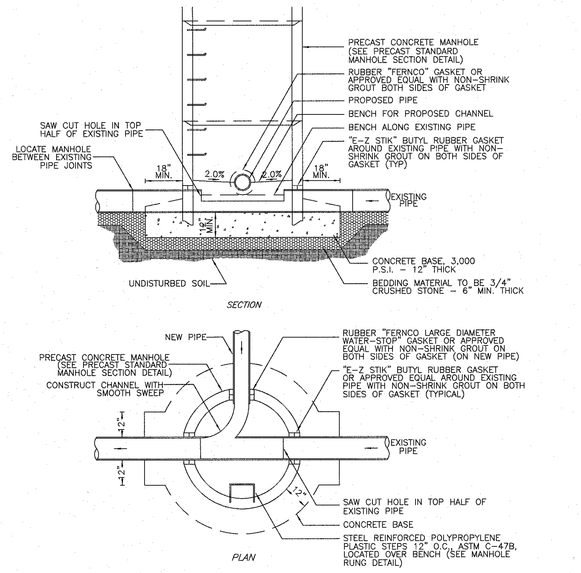

ROCKLAND COUNTY SEWER DISTRICT NO. 1
EXISTING SEWER CONNECTION DETAIL
N.T.S.

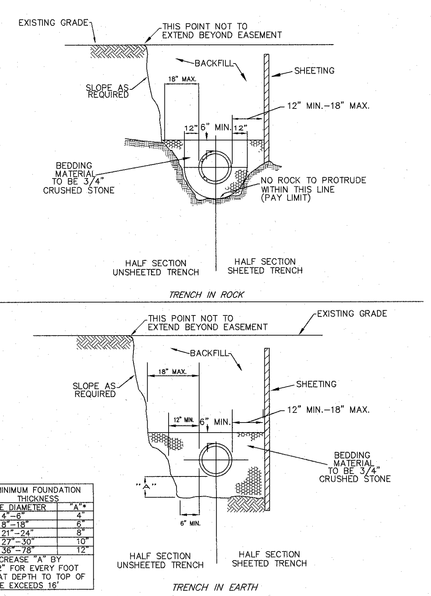

MINIMUM FOUNDATION THICKNESS	
PIPE DIAMETER	"A"*
8"-12"	6"
15"-18"	8"
21"-24"	9"
27"-30"	10"
36"-48"	12"

*INCREASE "A" BY 1/2" FOR EVERY FOOT THAT DEPTH TO TOP OF PIPE EXCEEDS 16'.

ROCKLAND COUNTY SEWER DISTRICT NO. 1
TRENCH SECTIONS
N.T.S.

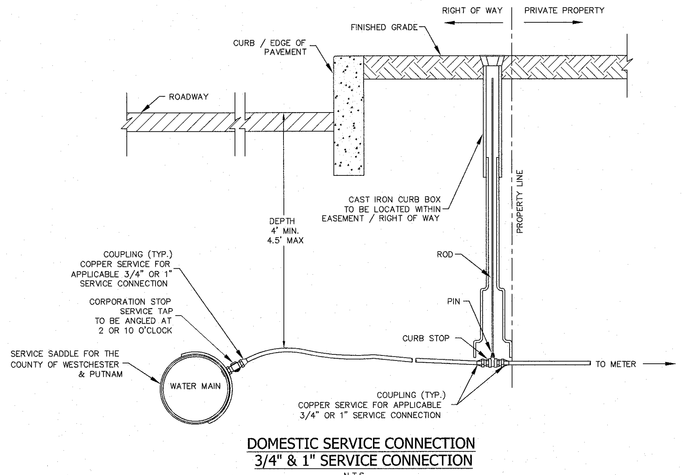

DOMESTIC SERVICE CONNECTION
3/4" & 1" SERVICE CONNECTION
N.T.S.

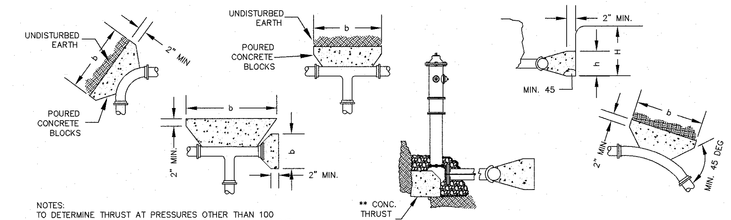

NOTES:
TO DETERMINE THRUST AT PRESSURES OTHER THAN 100 PSI, MULTIPLY THE THRUST OBTAINED IN THE TABLE BY THE RATIO OF THE PRESSURE TO 100.

$$\text{BEARING AREA (SF)} = \frac{\text{THRUST FORCE AT FITTING (LB.S)}}{\text{BEARING CAPACITY OF UNDISTURBED SOIL (LB.S/S.F)}}$$

$$\text{GRAVITY BLOCK SIZE (C.F.)} = \frac{\text{THRUST FORCE AT FITTING (LB.S)}}{\text{CONCRETE DENSITY 145 (LB.S/C.F)}}$$

NOTES:
1. PLACE 8 MIL. POLYETHYLENE BETWEEN CONCRETE AND FITTING (CONCRETE SHALL NOT INTERFERE WITH JOINT.)
2. MINIMUM CONCRETE THICKNESS SHALL BE 12 INCHES. THE HORIZONTAL DIMENSION (b) OF THE BEARING AREA SHALL BE BETWEEN 1.0 AND 2.0 TIMES THE VERTICAL DIMENSION (h): $b <= h <= 2h$
3. THE VERTICAL DIMENSION (h) OF THE BEARING AREA SHALL BE EQUAL TO ONE-HALF, THE TOTAL DEPTH (H) TO THE BOTTOM OF THE THRUST BLOCK BUT NOT LESS THAN THE OUTSIDE DIAMETER (Do) OF THE FITTING $(Do < h <= H/2)$.
5. THRUST BLOCK ORIENTATION SHALL BE SUCH THAT THE CENTER OF FITTING CORRESPONDS WITH THE CENTER OF THE THRUST BLOCK.
6. THE MINIMUM ALLOWABLE ANGLE (EITHER VERTICAL OR HORIZONTAL) SHALL BE 45 DEGREES.

TYPICAL THRUST BLOCKING DETAILS
N.T.S.

RESULTANT THRUST FORCE AT FITTINGS AT 100 PSI WATER PRESSURE

NOM. PIPE DIA. (IN)	DEAD END	90 BEND	45° BEND	22 1/2" BEND	11 1/4" BEND
3	1,232	1,742	943	481	241
4	1,810	2,559	1,385	706	355
* 6	3,739	5,288	2,862	1,459	733
8	6,433	9,097	4,923	2,510	1,261
10	9,677	13,685	7,406	3,776	1,897
12	13,685	19,353	10,474	5,340	2,683
14	18,385	26,001	14,072	7,174	3,604
16	23,779	33,628	18,199	9,278	4,661
18	29,865	42,235	22,858	11,653	5,855
20	36,644	51,822	28,046	14,298	7,183
24	52,279	73,934	40,013	20,398	10,249
30	80,425	113,738	61,554	31,380	15,766
36	115,209	162,931	88,177	44,952	22,585
42	155,528	219,950	119,036	60,684	30,489
48	203,683	280,637	155,127	79,083	39,733
54	260,214	367,999	199,160	101,531	51,011
60	298,121	421,606	228,172	116,321	58,443
64	338,707	479,004	259,235	132,157	66,398

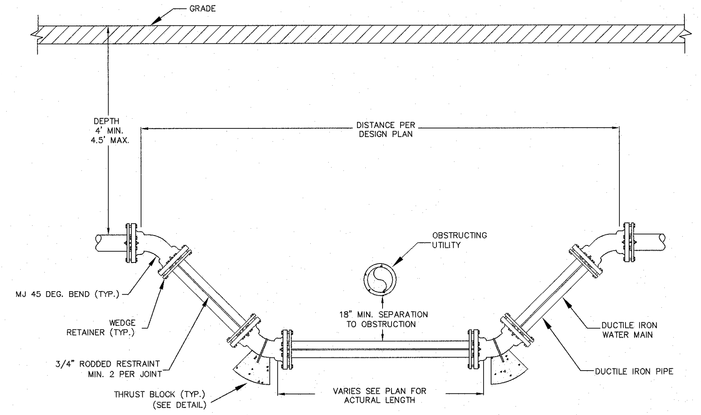

TYPICAL WATER MAIN OFFSET
N.T.S.

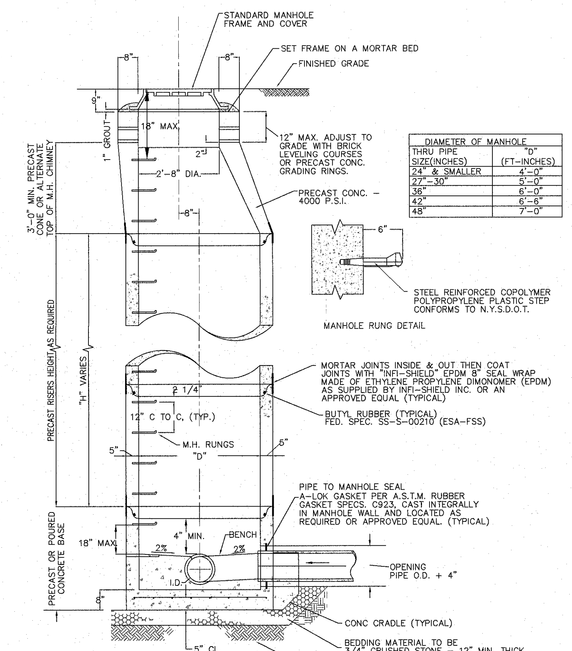

ROCKLAND COUNTY SEWER DISTRICT NO. 1
PRECAST STANDARD MANHOLE SECTION
N.T.S.

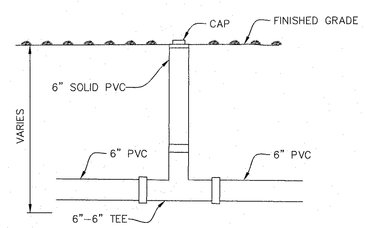

CLEANOUT DETAIL
N.T.S.

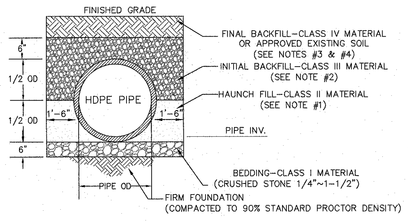

DRAINAGE TRENCH DETAIL
N.T.S.

PIPE STORAGE SYSTEM NOTES:

1. CLASS II MATERIAL CONSISTS OF CLEAN, COARSE GRAINED MATERIALS, SUCH AS GRAVEL, COARS SANDS AND GRAVEL/SAND MIXTURES (1-1/2 INCH IN SIZE). (AASHTO CLASSIFICATION A1 & A3)
2. CLASS III MATERIAL CONSISTS OF COARSE GRAINED MATERIALS WITH FINES INCLUDING SILTY OR CLAYEY GRAVELS OR SANDS. GRAVEL OR SAND MUST COMPRISE MORE THAN 50 PERCENT OF CLASS III MATERIALS.
3. CLASS IV MATERIAL CONSISTS OF FINE GRAINED MATERIALS, SUCH AS FINE SAND AND SOILS CONTAINING 50 PERCENT OR MORE CLAY OR SILT. SOILS CLASSIFIED AS IVa OR IVb WHICH HAVE PLASTICITY ARE NOT RECOMMENDED FOR EMBEDMENT ZONE.
4. USING EXISTING SOIL FOR FINAL BACKFILL IS ALLOWED ONLY IF IT IS FREE OF ORGANIC OR RECYCLED MATERIALS.

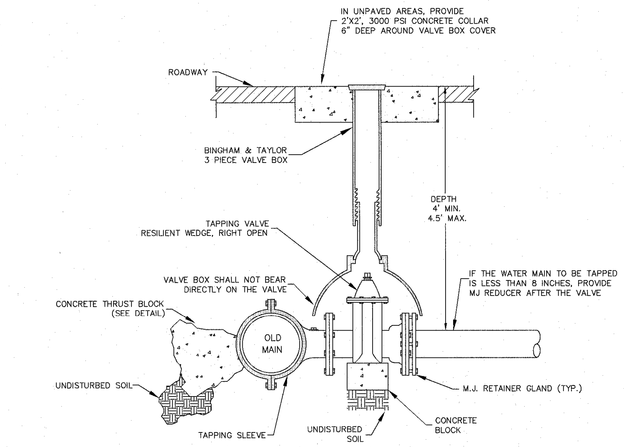

TAPPING EXISTING WATER MAIN
N.T.S.

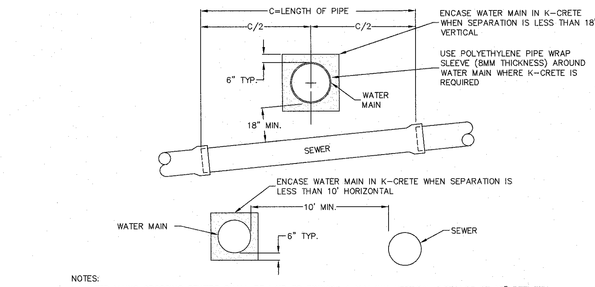

NOTES:
1. WATER MAINS CROSSING SEWERS SHALL BE LAID TO PROVIDE A MINIMUM VERTICAL DISTANCE OF 18" BETWEEN THE OUTSIDE OF THE WATER MAIN & THE OUTSIDE OF THE SEWER. THIS WILL BE THE CASE WHETHER THE WATER MAIN PASSES ABOVE OR BELOW THE SEWER.
2. AT CROSSINGS ONE FULL LENGTH OF SEWER PIPE SHALL BE LAID SO BOTH JOINTS WILL BE AS FAR FROM THE WATER MAIN AS POSSIBLE. SEE DETAIL WHERE THE SEWER HAS ALREADY BEEN INSTALLED, THE WATER MAIN SHALL BE PLACED SO THAT THE JOINTS ON THE WATER MAIN ARE EQUIDISTANT FROM THE SEWER.
3. WATER MAINS SHALL BE LAID AT LEAST 10' HORIZONTALLY FROM ANY EXISTING OR PROPOSED SEWER. IN CASES WHERE THIS IS NOT POSSIBLE, THE REVIEWING AUTHORITY MAY ALLOW ENCASEMENT, IF SUPPORTED BY DATA FROM THE DESIGN ENGINEER.
4. NO WATER PIPE SHALL PASS THROUGH OR COME IN CONTACT WITH ANY SEWER MANHOLE.
5. IN THE EVENT THAT THERE IS A DEVIATION FROM ANY OF THE ABOVE REQUIREMENTS, SAID CHANGES MUST BE APPROVED BY THE COUNTY HEALTH DEPARTMENT PRIOR TO COMPLETION OF ANY SUCH CHANGES.

TYPICAL WATER & SEWER CROSSING AND SEPARATION
N.T.S.

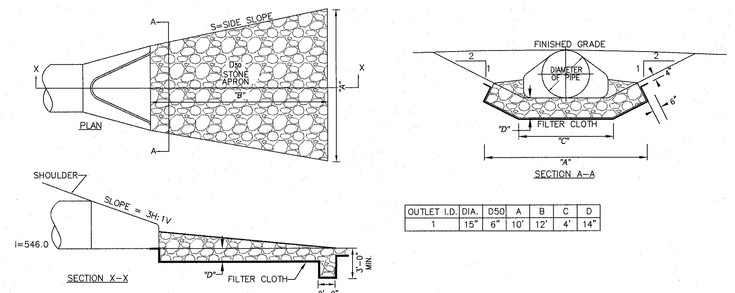

OUTLET I.D.	DIA.	D50	A	B	C	D
1	15"	6"	10'	12'	4'	14"

FLARED END SECTION #1 & APRON DETAIL FOR OUTLET
N.T.S.

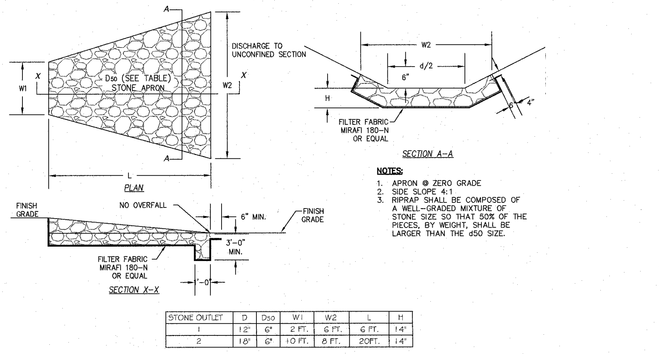

NOTES:
1. APRON @ ZERO GRADE
2. SIDE SLOPE 4:1
3. RIPRAP SHALL BE COMPOSED OF A WELL-GRADED MIXTURE OF STONE SIZE SO THAT 50% OF THE PIECES, BY WEIGHT, SHALL BE LARGER THAN THE d50 SIZE.

STONE OUTLET	D	D50	W1	W2	L	H
1	12"	6"	2 FT.	6 FT.	6 FT.	14"
2	18"	6"	10 FT.	8 FT.	20FT.	14"

STONE OUTLET #1 & #2 DETAIL
N.T.S.

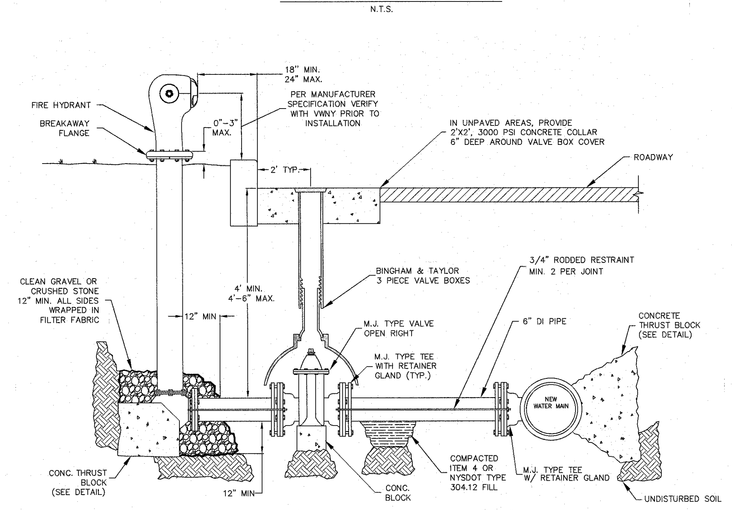

FIRE HYDRANT INSTALLATION DETAIL (NEW MAIN)
N.T.S.

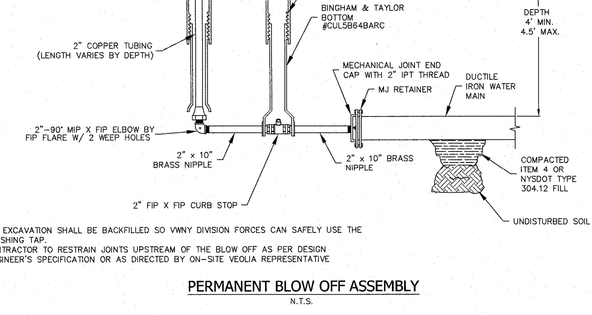

NOTE:
1. THE EXCAVATION SHALL BE BACKFILLED SO VWNY DIVISION FORCES CAN SAFELY USE THE FLUSHING TAP.
2. CONTRACTOR TO RESTRAIN JOINTS UPSTREAM OF THE BLOW OFF AS PER DESIGN ENGINEER'S SPECIFICATION OR AS DIRECTED BY ON-SITE VEOLIA REPRESENTATIVE

PERMANENT BLOW OFF ASSEMBLY
N.T.S.

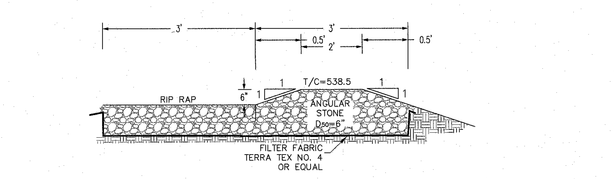

LEVEL SPREADER DETAIL
N.T.S.

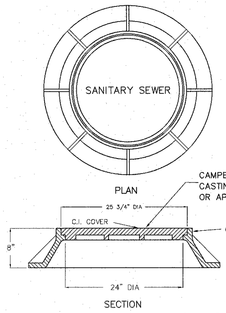

ROCKLAND COUNTY SEWER DISTRICT NO. 1
DETAIL OF STANDARD MANHOLE FRAME & COVER
N.T.S.

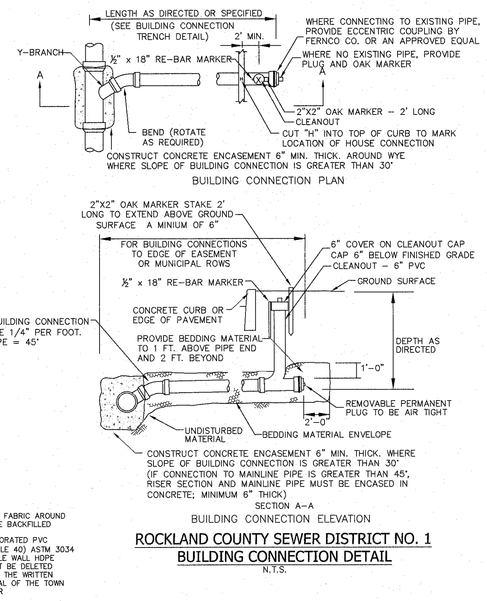

ROCKLAND COUNTY SEWER DISTRICT NO. 1
BUILDING CONNECTION DETAIL
N.T.S.

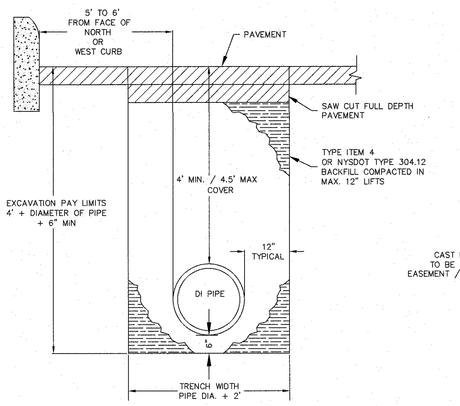

NOTE:
1. BACKFILL SHALL BE PLACED IN MINIMUM12" LIFTS AND COMPACTED USING MECHANICAL MEANS OF COMPACTION OR AS APPROVED BY VEOLIA WATER
2. WOOD BLOCKING SHALL NOT BE USED BENEATH THE PIPE AS A MEANS OF SETTING GRADE.
3. ROCK AND SOIL EXCAVATION PAY LIMITS SHALL BE BASED ON A 4 FEET OF DEPTH, PLUS THE DIAMETER OF PIPE PLUS 6 INCHES OF BEDDING. THE TRENCH WIDTH SHALL BE BASED ON THE PIPE DIAMETER PLUS 24 INCHES. COSTS ASSOCIATED WITH OVER EXCAVATION SHALL BE AT THE CONTRACTOR'S EXPENSE.
4. PAVEMENT SHALL BE RESTORED IN ACCORDANCE WITH LOCAL, STATE, COUNTY PERMIT REQUIREMENTS, OR PRIVATE PROPERTY OWNER.

WATER MAIN TRENCH DETAIL ROADWAY (PUBLIC OR PRIVATE)
N.T.S.

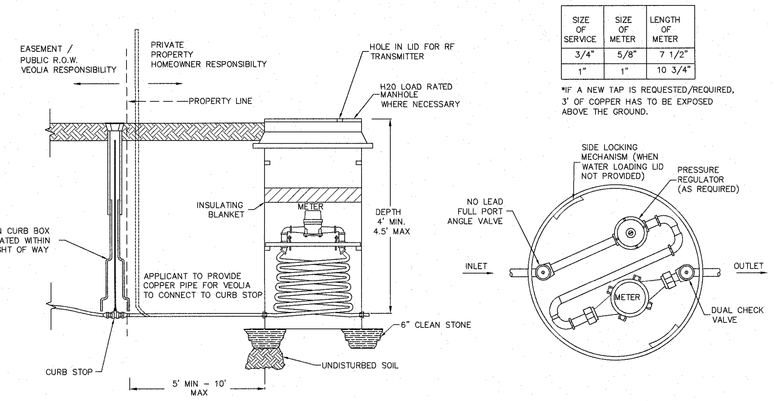

SIZE OF SERVICE	SIZE OF METER	LENGTH OF METER
3/4"	5/8"	7 1/2"
1"	1"	10 3/4"

*IF A NEW TAP IS REQUESTED/REQUIRED, 3' OF COPPER HAS TO BE EXPOSED ABOVE THE GROUND.

3/4" TO 1" DOMESTIC SERVICE - METER PIT
N.T.S.

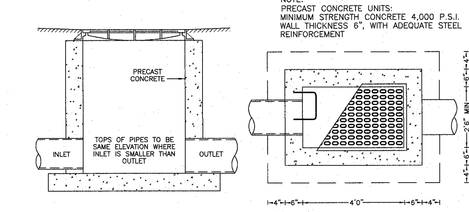

NOTE:
PRECAST CONCRETE UNITS:
MINIMUM STRENGTH CONCRETE 4,000 P.S.I.
WALL THICKNESS 6", WITH ADEQUATE STEEL REINFORCEMENT

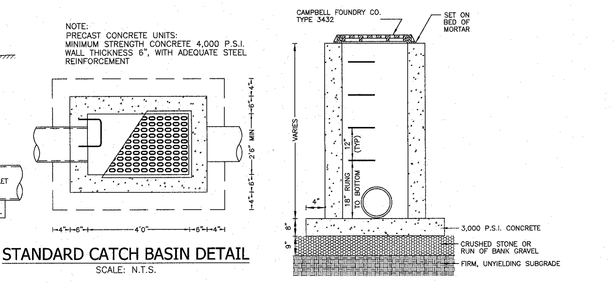

STANDARD CATCH BASIN DETAIL
SCALE: N.T.S.

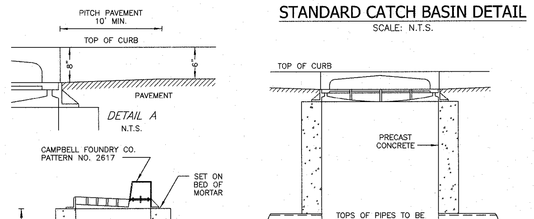

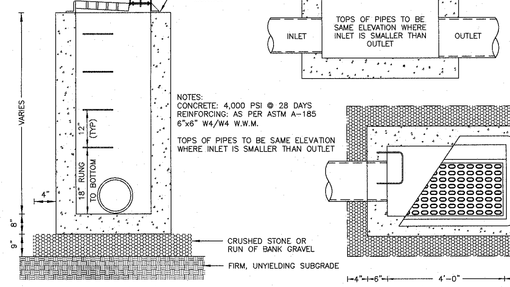

NOTES:
CONCRETE: 4,000 PSI @ 28 DAYS
REINFORCING: AS PER ASTM A-185
6"x6" W4/W4 W.W.M.
TOPS OF PIPES TO BE SAME ELEVATION WHERE INLET IS SMALLER THAN OUTLET

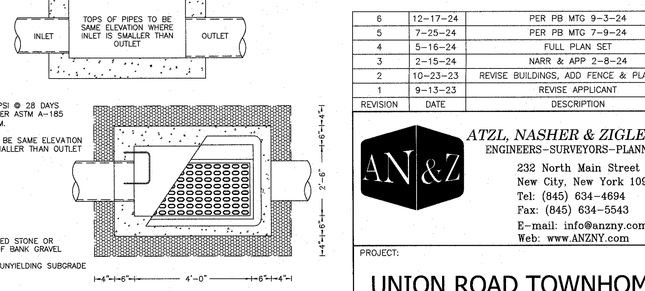

PRECAST CATCH BASIN DETAIL
N.T.S.

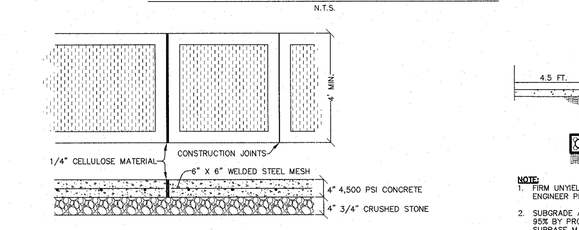

1. CONSTRUCTION JOINTS HAVING A 1/4 INCH RADIUS SHALL BE PLACED AT 4 FEET INTERVALS.
2. INSTALL EXPANSION JOINTS OF 1/4 INCH CELLULOSE MATERIAL OR EQUAL AT 30 FEET INTERVALS.
3. CONCRETE SHALL PROVIDE A MINIMUM COMPRESSIVE STRENGTH OF 4,500 PSI AT 28 DAYS.
4. CONCRETE SHALL BE AIR ENTRAINED 6% PLUS or MINUS 1%.
5. SIDEWALK REINFORCEMENT SHALL CONSIST OF #6 GUAGE 6" X 6" STEEL MESH PLACED 2 INCHES FROM THE BOTTOM OF THE SIDEWALK SLAB.

CONCRETE SIDEWALK DETAIL
N.T.S.

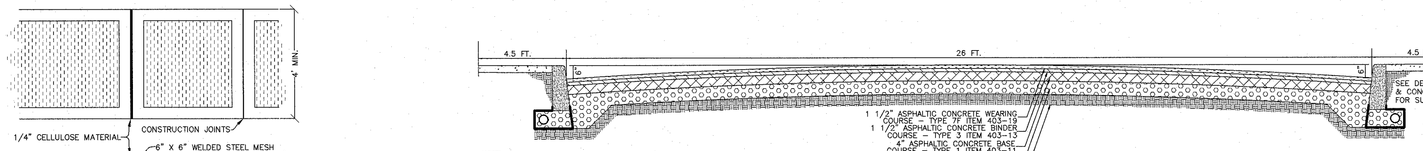

NOTE:
1. FIRM UNYIELDING SUBGRADE TO BE VERIFIED BY THE TOWN ENGINEER PRIOR TO REPLACEMENT OF SUBBASE COURSE.
2. SUBGRADE AND SUBBASE SHALL BE COMPACTED TO A MINIMUM OF 95% BY PROCTOR DENSITY TESTING OF THE SUBGRADE AND SUBBASE MAY BE REQUIRED AT THE DISCRETION OF THE TOWN ENGINEER.

PAVEMENT CROSS-SECTION AND PAVEMENT DETAIL FOR SUBURBAN STREETS
N.T.S.

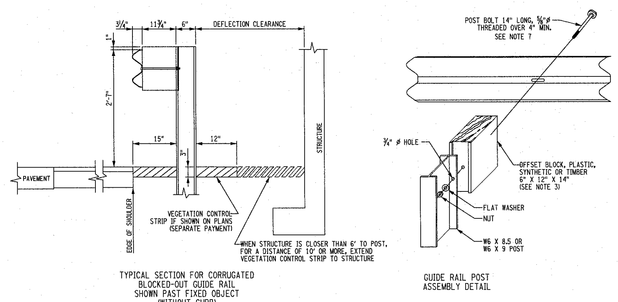

BLOCK-OUT GUIDE RAIL DETAIL - GLORIA DRIVE
N.T.S.

REVISION	DATE	DESCRIPTION
6	12-17-24	PER PB MTG 9-3-24
5	7-25-24	PER PB MTG 7-9-24
4	5-16-24	FULL PLAN SET
3	2-15-24	NARR & APP 2-8-24
2	10-23-23	REVISE BUILDINGS, ADD FENCE & PLANTINGS
1	9-13-23	REVISE APPLICANT

ATZL, NASHER & ZIGLER P.C.
ENGINEERS-SURVEYORS-PLANNERS
232 North Main Street
New City, New York 10956
Tel: (845) 634-4694
Fax: (845) 634-5543
E-mail: info@anzny.com
Web: www.ANZNY.com

PROJECT:

UNION ROAD TOWNHOMES

VILLAGE OF NEW HEMPSTEAD
ROCKLAND COUNTY, NEW YORK

TITLE:

DETAILS

"UNAUTHORIZED ALTERATIONS OR ADDITIONS TO A SURVEY MAP BEARING A LICENSED LAND SURVEYOR'S EMBOSSED SEAL IS A VIOLATION OF SECTION 7209, SUBDIVISION 2, OF THE NEW YORK STATE EDUCATION LAW."
"ONLY COPIES FROM THE ORIGINAL TRACING OF THIS SURVEY MARKED WITH THE ORIGINAL SIGNATURE AND EMBOSSED SEAL SHALL BE CONSIDERED TO BE VALID TRUE COPIES."
"SURVEY TASKS INDICATED HERE ON GRANTY THAT THIS SURVEY WAS PREPARED IN ACCORDANCE WITH THE ESTABLISHED CODE OF PRACTICE FOR LAND SURVEYOR'S (NYS EDUCATION LAW SECTION 7209). ADDITIONS TO SURVEYORS REPORTS, SUCH AS CERTIFICATIONS SHALL RUN ONLY TO THOSE NAMED INDIVIDUALS AND/OR ENTITIES. THE SURVEYOR'S CERTIFICATION IS NOT TRANSFERABLE TO ADDITIONAL INDIVIDUALS, INSTITUTIONS, THEIR SUCCESSORS AND/OR ASSIGNS OR SUBSEQUENT OWNERS."

RYAN A. NASHER, P.E.
N.Y.S. P.E. LIC. NO. 89066

JOHN R. ATZL
N.Y.S. P.L.S. LIC. NO. 49028

DRAWN BY: IS	CHECKED BY: JRA
DATE: AUGUST 30, 2023	SCALE: AS SHOWN
PROJECT NO: 3193	DRAWING NO: 4

F:\DRAWINGS\3193\3193 UNION ROAD TOWNHOMES & SURVEY 12-18-24.DWG

LEGEND

- EXISTING 2' CONTOUR
- EXISTING 10' CONTOUR
- EXISTING WATERLINE
- EXISTING WATER VALVE
- EXISTING FIRE HYDRANT
- EXISTING GAS LINE
- EXISTING GAS VALVE
- EXISTING CATCH BASIN
- EXISTING STORM DRAIN LINE
- EXISTING SEWER MANHOLE
- EXISTING SEWER LINE
- EXISTING SPOT ELEVATION
- EXISTING STONEWALL
- EXISTING UTILITY POLE
- EXISTING LIGHT POLE
- EXISTING SIGN
- EXISTING WATER VALVE
- EXISTING GAS VALVE
- EXISTING LAMP POST
- PROPOSED 2' CONTOUR
- PROPOSED 10' CONTOUR
- PROPOSED SPOT ELEVATION
- PROPOSED CATCH BASIN
- PROPOSED STORM DRAIN LINE
- PROPOSED SEWER HOUSE CONNECTION
- PROPOSED SEWER MANHOLE
- PROPOSED SEWER CLEANOUT
- PROPOSED STOP SIGN
- PROPOSED HANDICAP SIGN
- PROPOSED SOLID FENCE
- PROPOSED SOLID FENCE
- PROPOSED SWALE
- PROPOSED GATE VALVE
- PROPOSED WATER LINE
- PROPOSED WATER VALVE
- PROPOSED FIRE HYDRANT
- PROPOSED WATER METER PIT
- PROPOSED LAMP POST

TEMPORARY STAGING LEGEND

- PROPOSED TEMPORARY 2' CONTOUR
- PROPOSED TEMPORARY 10' CONTOUR
- PROPOSED TEMPORARY SPOT ELEVATION
- PROPOSED INLET PROTECTION
- PROPOSED STORM DRAIN LINE
- PROPOSED CHECK DAM
- PROPOSED STOCKPILE
- PROPOSED LOW FLOW DIFFUSER
- PROPOSED STONE OUTLET

SIGN LEGEND

- PROPOSED STOP SIGN
- PROPOSED HANDI CAP SIGN
- PROPOSED CROSS WALK SIGN
- PROPOSED PEDESTRIAN CROSSING SIGN
- PROPOSED NO PARKING SIGN
- PROPOSED NO PARKING ALONG ROADS SIGN

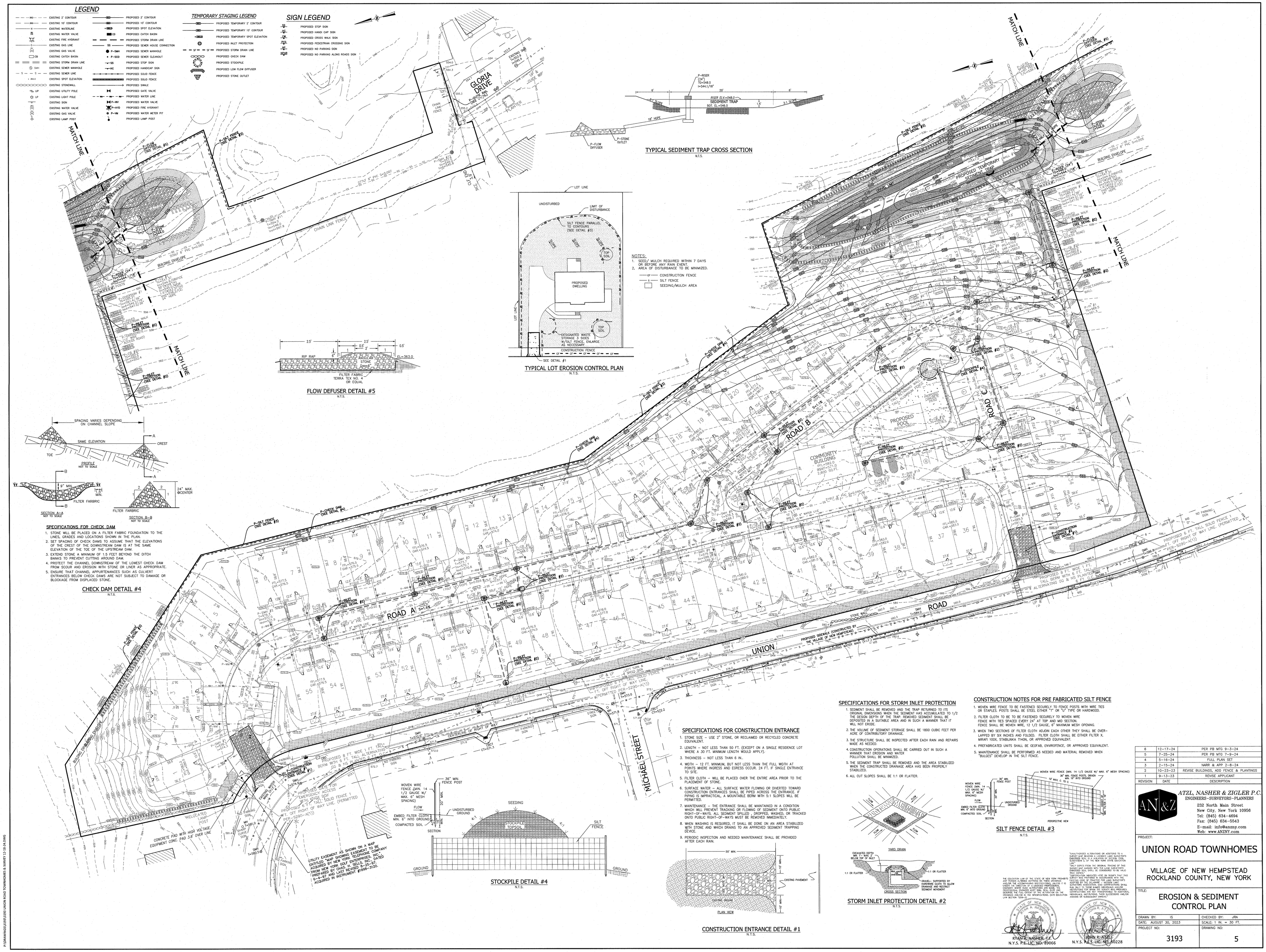

TYPICAL SEDIMENT TRAP CROSS SECTION
N.T.S.

TYPICAL LOT EROSION CONTROL PLAN
N.T.S.

NOTES:
1. SEED/ MULCH REQUIRED WITHIN 7 DAYS OR BEFORE ANY RAIN EVENT.
2. AREA OF DISTURBANCE TO BE MINIMIZED.

— cf — CONSTRUCTION FENCE
— s — SILT FENCE
SEEDING/MULCH AREA

FLOW DEFUSER DETAIL #5
N.T.S.

CHECK DAM DETAIL #4
N.T.S.

SPECIFICATIONS FOR CHECK DAM
1. STONE WILL BE PLACED ON A FILTER FABRIC FOUNDATION TO THE LINES, GRADES AND LOCATIONS SHOWN IN THE PLAN.
2. SET SPACING OF CHECK DAMS TO ASSUME THAT THE ELEVATIONS OF THE CREST OF THE DOWNSTREAM DAM IS AT THE SAME ELEVATION OF THE TOE OF THE UPSTREAM DAM.
3. EXTEND STONE A MINIMUM OF 1.5 FEET BEYOND THE DITCH BANKS TO PREVENT CUTTING AROUND DAM.
4. PROTECT THE CHANNEL DOWNSTREAM OF THE LOWEST CHECK DAM FROM SCOUR AND EROSION WITH STONE OR LINER AS APPROPRIATE.
5. ENSURE THAT CHANNEL APPURTENANCES SUCH AS CULVERT ENTRANCES BELOW CHECK DAMS ARE NOT SUBJECT TO DAMAGE OR BLOCKAGE FROM DISPLACED STONE.

STOCKPILE DETAIL #4
N.T.S.

CONSTRUCTION ENTRANCE DETAIL #1
N.T.S.

SPECIFICATIONS FOR CONSTRUCTION ENTRANCE
1. STONE SIZE – USE 2" STONE, OR RECLAIMED OR RECYCLED CONCRETE EQUIVALENT.
2. LENGTH – NOT LESS THAN 50 FT. (EXCEPT ON A SINGLE RESIDENCE LOT WHERE A 30 FT. MINIMUM LENGTH WOULD APPLY).
3. THICKNESS – NOT LESS THAN 6 IN..
4. WIDTH – 12 FT. MINIMUM, BUT NOT LESS THAN THE FULL WIDTH AT POINTS WHERE INGRESS AND EGRESS OCCUR. 24 FT. IF SINGLE ENTRANCE TO SITE.
5. FILTER CLOTH – WILL BE PLACED OVER THE ENTIRE AREA PRIOR TO THE PLACEMENT OF STONE.
6. SURFACE WATER – ALL SURFACE WATER FLOWING OR DIVERTED TOWARD CONSTRUCTION ENTRANCES SHALL BE PIPED ACROSS THE ENTRANCE. IF PIPING IS IMPRACTICAL, A MOUNTABLE BERM WITH 5:1 SLOPES WILL BE PERMITTED.
7. MAINTENANCE – THE ENTRANCE SHALL BE MAINTAINED IN A CONDITION WHICH WILL PREVENT TRACKING OR FLOWING OF SEDIMENT ONTO PUBLIC RIGHT–OF–WAYS. ALL SEDIMENT SPILLED , DROPPED, WASHED, OR TRACKED ONTO PUBLIC RIGHT–OF–WAYS MUST BE REMOVED IMMEDIATELY.
8. WHEN WASHING IS REQUIRED, IT SHALL BE DONE ON AN AREA STABILIZED WITH STONE AND WHICH DRAINS TO AN APPROVED SEDIMENT TRAPPING DEVICE.
9. PERIODIC INSPECTION AND NEEDED MAINTENANCE SHALL BE PROVIDED AFTER EACH RAIN.

SPECIFICATIONS FOR STORM INLET PROTECTION
1. SEDIMENT SHALL BE REMOVED AND THE TRAP RETURNED TO ITS ORIGINAL DIMENSIONS WHEN THE SEDIMENT HAS ACCUMULATED TO 1/2 THE DESIGN DEPTH OF THE TRAP. REMOVED SEDIMENT SHALL BE DEPOSITED IN A SUITABLE AREA AND IN SUCH A MANNER THAT IT WILL NOT ERODE.
2. THE VOLUME OF SEDIMENT STORAGE SHALL BE 1800 CUBIC FEET PER ACRE OF CONTRIBUTORY DRAINAGE.
3. THE STRUCTURE SHALL BE INSPECTED AFTER EACH RAIN AND REPAIRS MADE AS NEEDED.
4. CONSTRUCTION OPERATIONS SHALL BE CARRIED OUT IN SUCH A MANNER THAT EROSION AND WATER POLLUTION SHALL BE MINIMIZED.
5. THE SEDIMENT TRAP SHALL BE REMOVED AND THE AREA STABILIZED WHEN THE CONSTRUCTED DRAINAGE AREA HAS BEEN PROPERLY STABILIZED.
6. ALL CUT SLOPES SHALL BE 1:1 OR FLATTER.

STORM INLET PROTECTION DETAIL #2
N.T.S.

CONSTRUCTION NOTES FOR PRE FABRICATED SILT FENCE
1. WOVEN WIRE FENCE TO BE FASTENED SECURELY TO FENCE POSTS WITH WIRE TIES OR STAPLES. POSTS SHALL BE STEEL EITHER 'T' OR 'U' TYPE OR HARDWOOD.
2. FILTER CLOTH TO BE TO BE FASTENED SECURELY TO WOVEN WIRE FENCE WITH TIES SPACED EVERY 24" AT TOP AND MID SECTION. FENCE SHALL BE WOVEN WIRE, 12 1/2 GAUGE, 6" MAXIMUM MESH OPENING.
3. WHEN TWO SECTIONS OF FILTER CLOTH ADJOIN EACH OTHER THEY SHALL BE OVER–LAPPED BY SIX INCHES AND FOLDED. FILTER CLOTH SHALL BE EITHER FILTER X, MIRAFI 100X, STABLINKA T140N, OR APPROVED EQUIVALENT.
4. PREFABRICATED UNITS SHALL BE GEOFAB, ENVIROFENCE, OR APPROVED EQUIVALENT.
5. MAINTENANCE SHALL BE PERFORMED AS NEEDED AND MATERIAL REMOVED WHEN "BULGES" DEVELOP IN THE SILT FENCE.

SILT FENCE DETAIL #3
N.T.S.

THE EDUCATION LAW OF THE STATE OF NEW YORK PROHIBITS ANY PERSON, UNLESS ACTING IN THE PROFESSIONAL ENGINEER MUST SIGN, SEAL, DATE AND ADDITIONALLY IF ACTING UNDER THE DIRECTION OF A LICENSED PROFESSIONAL ENGINEER, THEIR SUCCESSORS AND/OR THE ACCOMPANYING SPECIFICATIONS, UNLESS IT IS ALTERED, THE ALTERING PROFESSIONAL ENGINEER MUST SIGN, SEAL, DATE AND ADDITIONALLY IF ACTING UNDER THE DIRECTION OF A LICENSED PROFESSIONAL ENGINEER, THEIR SUCCESSORS AND/OR ASSIGNS OR SUBSEQUENT OWNERS.

RYAN A. NASHER, P.E.
N.Y.S. PE LIC. NO. 89066

JOHN R. ATZL
N.Y.S. PLS LIC. NO. 50228

REVISION	DATE	DESCRIPTION
6	12–17–24	PER PB MTG 9–3–24
5	7–25–24	PER PB MTG 7–9–24
4	5–16–24	FULL PLAN SET
3	2–15–24	NARR & APP 2–8–24
2	10–23–23	REVISE BUILDINGS, ADD FENCE & PLANTINGS
1	9–13–23	REVISE APPLICANT

ATZL, NASHER & ZIGLER P.C.
ENGINEERS–SURVEYORS–PLANNERS
232 North Main Street
New City, New York 10956
Tel: (845) 634–4694
Fax: (845) 634–5543
E–mail: info@anzny.com
Web: www.ANZNY.com

PROJECT:

UNION ROAD TOWNHOMES

VILLAGE OF NEW HEMPSTEAD
ROCKLAND COUNTY, NEW YORK

TITLE:

EROSION & SEDIMENT CONTROL PLAN

DRAWN BY: IS	CHECKED BY: JRA
DATE: AUGUST 30, 2023	SCALE: 1 IN. = 30 FT.
PROJECT NO: 3193	DRAWING NO: 5

P:\DRAWINGS\3193\3193 UNION ROAD TOWNHOMES & SURVEY 12-15-24.DWG

LAND GRADING CONSTRUCTION SPECIFICATIONS

1. ALL GRADED OR DISTURBED AREAS INCLUDING SLOPES SHALL BE PROTECTED DURING CLEARING AND CONSTRUCTION IN ACCORDANCE WITH THE APPROVED SEDIMENT CONTROL PLAN UNTIL THEY ARE PERMANENTLY STABILIZED.
2. ALL SEDIMENT CONTROL PRACTICES AND MEASURES SHALL BE CONSTRUCTED, APPLIED AND MAINTAINED IN ACCORDANCE WITH THE APPROVED SEDIMENT CONTROL PLAN AND THE "NYS STANDARDS & SPECIFICATIONS FOR EROSION & & SEDIMENT CONTROL, 2005".
3. TOPSOIL REQUIRED FOR THE ESTABLISHMENT OF VEGETATION SHALL BE STOCKPILED IN AMOUNT NECESSARY TO COMPLETE FINISHED GRADING OF ALL EXPOSED AREAS.
4. AREAS TO BE FILLED SHALL BE CLEARED, GRUBBED, AND STRIPPED OF TOPSOIL TO REMOVE TREES, VEGETATION, ROOTS OR OTHER OBJECTIONABLE MATERIAL.
5. AREAS WHICH ARE TO BE TOPSOILED SHALL BE SCARIFIED TO A MINIMUM DEPTH OF FOUR INCHES PRIOR TO PLACEMENT OF TOPSOIL.
6. ALL FILLS SHALL BE COMPACTED AS REQUIRED TO REDUCE EROSION, SLIPPAGE, SETTLEMENT, SUBSIDENCE OR OTHER RELATED PROBLEMS. FILL INTENDED TO SUPPORT BUILDINGS, STRUCTURES AND CONDUITS, ETC. SHALL BE COMPACTED IN ACCORDANCE WITH LOCAL REQUIREMENTS OR CODES.
7. ALL FILL TO BE PLACED AND COMPACTED IN LAYERS NOT TO EXCEED 9 INCHES IN THICKNESS.
8. EXCEPT FOR APPROVED LANDFILLS, FILL MATERIAL SHALL BE FREE OF FROZEN PARTICLES, BRUSH, ROOTS, SOD, OR OTHER FOREIGN OR OTHER OBJECTIONABLE MATERIALS THAT WOULD INTERFERE WITH OR PREVENT CONSTRUCTION OF SATISFACTORY FILLS.
9. FROZEN MATERIALS OR SOFT, MUCKY OR HIGHLY COMPRESSIBLE MATERIALS SHALL NOT BE INCORPORATED IN FILLS.
10. FILL SHALL NOT BE PLACED ON SATURATED OR FROZEN SURFACES.
11. SEEPS OR SPRINGS ENCOUNTERED DURING CONSTRUCTION SHALL BE HANDLED IN ACCORDANCE WITH THE STANDARD AND SPECIFICATION FOR SUBSURFACE DRAIN OR OTHER APPROVED METHOD.
12. ALL GRADED AREAS SHALL BE PERMANENTLY STABILIZED IMMEDIATELY FOLLOWING FINISHED GRADING.

GENERAL CONTSTRUCTION SEQUENCE

1. SCHEDULE A PRE-CONSTRUCTION MEETING
2. LOCATE NATURAL RESOURCE AND LIMIT OF DISTURBANCE PER PLAN
3. INSTALL PERIMETER E&SC PRACTICE PER PLAN
4. CREATE CONSTRUCTION ENTRANCE & TEMPORARY STAGING
5. LIMIT GRADING FOR E&SC PRACTICES
6. INSTALL DIVERSION SWALES, CHECK DAMS, INTERNAL SWALE FOR STABILIZATION WHERE APPLICABLE
7. INSTALL SEDIMENT BASIN / SEDIMENT TRAP PER PLAN
8. DISPOSE CLEARING AND GRADING MATERIALS AS CONSTRUCTION IS IN PROGRESS
9. STOCK PILE TOP SOIL AND STABILIZE
10. ROUGH GRADING/CUT & FILL AND STABILIZE
11. INSTALL UTILITIES AND DRAINAGE STRUCTURES
12. PROCEED PARTIAL ROAD CONSTRUCTION WHERE APPLICABLE
13. CONSTRUCT FOUNDATION & BUILDING STRUCTURES AS PER PLAN
14. CONSTRUCT FINAL GRADING AND STABILIZE AS PER PLAN
15. APPLY SOIL RESTORATION AS SHOWN ON PLAN
16. FINAL STABILIZATION TO APPLY, I.E. TOP SOIL, PERMANENT GREEN INFRASTRUCTURE PRACTICES AND LANDSCAPING.
17. REMOVE SEDIMENT & COMPLETE PERMANENT POST CONSTRUCTION SMPs PER PLAN
18. REMOVE E&SC PRACTICES AND APPLY FOR NOTICE OF TERMINATION (N.O.T.)

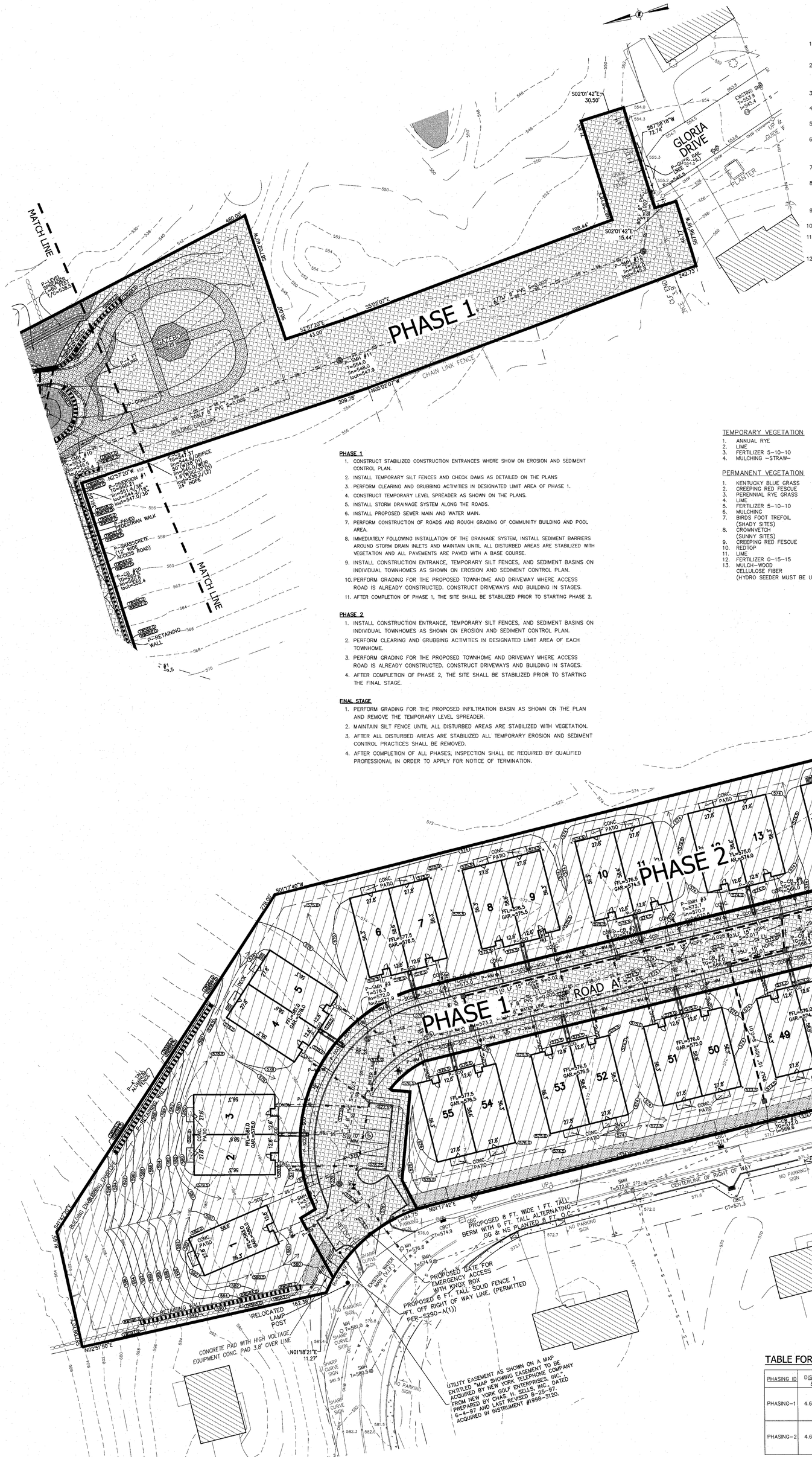

TEMPORARY VEGETATION

1.	ANNUAL RYE	20 LBS PER ACRE
2.	LIME	2000 LBS PER ACRE
3.	FERTILIZER 5-10-10	600 LBS PER ACRE
4.	MULCHING -STRAW-	1.5-2.5 TON PER ACRE

PERMANENT VEGETATION

1.	KENTUCKY BLUE GRASS	20 LBS PER ACRE
2.	CREEPING RED FESCUE	20 LBS PER ACRE
3.	PERENNIAL RYE GRASS	5 LBS PER ACRE
4.	LIME	2000 LBS PER ACRE
5.	FERTILIZER 5-10-10	600 LBS PER ACRE
6.	MULCHING	1.5-2.5 TON PER ACRE
7.	BIRDS FOOT TREFOIL (SHADY SITES)	8 LBS PER ACRE
8.	CROWNVETCH (SUNNY SITES)	15 LBS PER ACRE
9.	CREEPING RED FESCUE	20 LBS PER ACRE
10.	REDTOP	2 LBS PER ACRE
11.	LIME	2 LBS PER ACRE
12.	FERTILIZER 0-15-15	1000 LBS PER ACRE
13.	MULCH-WOOD CELLULOSE FIBER (HYDRO SEEDER MUST BE USED)	750 LBS PER ACRE

PHASE 1

1. CONSTRUCT STABILIZED CONSTRUCTION ENTRANCES WHERE SHOW ON EROSION AND SEDIMENT CONTROL PLAN.
2. INSTALL TEMPORARY SILT FENCES AND CHECK DAMS AS DETAILED ON THE PLANS
3. PERFORM CLEARING AND GRUBBING ACTIVITIES IN DESIGNATED LIMIT AREA OF PHASE 1.
4. CONSTRUCT TEMPORARY LEVEL SPREADER AS SHOWN ON THE PLANS.
5. INSTALL STORM DRAINAGE SYSTEM ALONG THE ROADS.
6. INSTALL PROPOSED SEWER MAIN AND WATER MAIN.
7. PERFORM CONSTRUCTION OF ROADS AND ROUGH GRADING OF COMMUNITY BUILDING AND POOL AREA.
8. IMMEDIATELY FOLLOWING INSTALLATION OF THE DRAINAGE SYSTEM, INSTALL SEDIMENT BARRIERS AROUND STORM DRAIN INLETS AND MAINTAIN UNTIL ALL DISTURBED AREAS ARE STABILIZED WITH VEGETATION AND ALL PAVEMENTS ARE PAVED WITH A BASE COURSE.
9. INSTALL CONSTRUCTION ENTRANCE, TEMPORARY SILT FENCES, AND SEDIMENT BASINS ON INDIVIDUAL TOWNHOMES AS SHOWN ON EROSION AND SEDIMENT CONTROL PLAN.
10. PERFORM GRADING FOR THE PROPOSED TOWNHOME AND DRIVEWAY WHERE ACCESS ROAD IS ALREADY CONSTRUCTED. CONSTRUCT DRIVEWAYS AND BUILDING IN STAGES.
11. AFTER COMPLETION OF PHASE 1, THE SITE SHALL BE STABILIZED PRIOR TO STARTING PHASE 2.

PHASE 2

1. INSTALL CONSTRUCTION ENTRANCE, TEMPORARY SILT FENCES, AND SEDIMENT BASINS ON INDIVIDUAL TOWNHOMES AS SHOWN ON EROSION AND SEDIMENT CONTROL PLAN.
2. PERFORM CLEARING AND GRUBBING ACTIVITIES IN DESIGNATED LIMIT AREA OF EACH TOWNHOME.
3. PERFORM GRADING FOR THE PROPOSED TOWNHOME AND DRIVEWAY WHERE ACCESS ROAD IS ALREADY CONSTRUCTED. CONSTRUCT DRIVEWAYS AND BUILDING IN STAGES.
4. AFTER COMPLETION OF PHASE 2, THE SITE SHALL BE STABILIZED PRIOR TO STARTING THE FINAL STAGE.

FINAL STAGE

1. PERFORM GRADING FOR THE PROPOSED INFILTRATION BASIN AS SHOWN ON THE PLAN AND REMOVE THE TEMPORARY LEVEL SPREADER.
2. MAINTAIN SILT FENCE UNTIL ALL DISTURBED AREAS ARE STABILIZED WITH VEGETATION.
3. AFTER ALL DISTURBED AREAS ARE STABILIZED ALL TEMPORARY EROSION AND SEDIMENT CONTROL PRACTICES SHALL BE REMOVED.
4. AFTER COMPLETION OF ALL PHASES, INSPECTION SHALL BE REQUIRED BY QUALIFIED PROFESSIONAL IN ORDER TO APPLY FOR NOTICE OF TERMINATION.

TABLE FOR PHASING SCHEDULE

PHASING ID	DISTURBED AREA	SYMBOL
PHASING-1	4.61 ACS	
PHASING-2	4.64 ACS	

TOTAL AREA OF DISTURBANCE:
9.25 ACS.

GENERAL SOIL RESTORATION NOTES AND REQUIREMENTS:

1) SOIL RESTORATION IS NOT REQUIRED TO THE AREA WHERE NO SOIL DISTURBANCE IS PROPOSED.

2) SOIL RESTORATION IS NOT REQUIRED TO THE AREA WHERE MINIMAL SOIL DISTURBANCE IS PROPOSED SUCH AS CLEARING AND GRUBBING.

3) AERATE AND APPLY 6 INCH OF TOP SOIL TO AREAS WHERE TOPSOIL IS STRIPPED ONLY AND NO CHANGE IN GRADE. AERATION INCLUDES THE USE OF MACHINES SUCH AS TRACTOR-DRAWN IMPLEMENTS WITH COULTERS MAKING A NARROW SLIT IN THE SOIL, A ROLLER WITH MANY SPIKES MAKING INDENTATIONS IN THE SOIL, OR PRONGS WHICH FUNCTION LIKE A MINI-SUBSOILER.

4) SOIL RESTORATION (DE-COMPACTION AND COMPOST ENHANCEMENT) IS REQUIRED TO AREAS WHERE CUT AND FILL ARE PROPOSED.

5) SOIL RESTORATION (DE-COMPACTION AND COMPOST ENHANCEMENT) IS REQUIRED TO AREAS WHERE HEAVY TRAFFIC AREAS ON SITE, ESPECIALLY IN A ZONE 5-25 FEET AROUND BUILDINGS BUT NOT WITHIN A 5 FEET PERIMETER AROUND FOUNDATION WALL.

6) SOIL RESTORATION (DE-COMPACTION AND COMPOST ENHANCEMENT) IS REQUIRED ON REDEVELOPMENT PROJECTS IN AREAS WHERE EXISTING IMPERVIOUS AREA WILL BE CONVERTED TO PERVIOUS AREA. DURING PERIODS OF RELATIVELY LOW TO MODERATE SUBSOIL MOISTURE, THE DISTURBED SUBSOILS ARE RETURNED TO ROUGH GRADE AND THE FOLLOWING SOIL RESTORATION STEPS APPLIED:

A) APPLY 3 INCHES OF COMPOST OVER SUBSOIL
B) TILL COMPOST INTO SUBSOIL TO A DEPTH OF AT LEAST 12 INCHES USING A CAT-MOUNTED RIPPER, TRACTOR-MOUNTED DISC, OR TILLER, MIXING, AND CIRCULATING AIR AND COMPOST INTO SUBSOILS
C) ROCK-PICK UNTIL UPLIFTED STONE/ROCK MATERIALS OF FOUR INCHES AND LARGER SIZE ARE CLEANED OFF THE SITE
D) APPLY TOPSOIL TO A DEPTH OF 6 INCHES
E) VEGETATE AS REQUIRED BY APPROVED PLAN.

SLOPES

25%+ = 2,576 SQ.FT.

SIGN LEGEND

- PROPOSED STOP SIGN
- PROPOSED HANDI CAP SIGN
- PROPOSED CROSS WALK SIGN
- PROPOSED PEDESTRIAN CROSSING SIGN
- PROPOSED NO PARKING SIGN
- PROPOSED NO PARKING ALONG ROADS SIGN

LEGEND

EXISTING 2' CONTOUR	PROPOSED 2' CONTOUR
EXISTING 10' CONTOUR	PROPOSED 10' CONTOUR
EXISTING WATERLINE	PROPOSED SPOT ELEVATION
EXISTING WATER VALVE	PROPOSED CATCH BASIN
EXISTING FIRE HYDRANT	PROPOSED STORM DRAIN LINE
EXISTING GAS LINE	PROPOSED SEWER HOUSE CONNECTION
EXISTING GAS VALVE	PROPOSED SEWER MANHOLE
EXISTING CATCH BASIN	PROPOSED SEWER CLEANOUT
EXISTING STORM DRAIN LINE	PROPOSED STOP SIGN
EXISTING SEWER MANHOLE	PROPOSED HANDICAP SIGN
EXISTING SEWER LINE	PROPOSED SOLID FENCE
EXISTING SPOT ELEVATION	PROPOSED SOLID FENCE
EXISTING STONEWALL	PROPOSED SWALE
EXISTING UTILITY POLE	PROPOSED GATE VALVE
EXISTING LIGHT POLE	PROPOSED WATER LINE
EXISTING SIGN	PROPOSED WATER VALVE
EXISTING WATER VALVE	PROPOSED FIRE HYDRANT
EXISTING GAS VALVE	PROPOSED WATER METER PIT
EXISTING LAMP POST	PROPOSED LAMP POST

THE EDUCATION LAW OF THE STATE OF NEW YORK PROHIBITS ANY PERSON, UNLESS HE IS ACTING UNDER THE DIRECTION OF A LICENSED PROFESSIONAL ENGINEER, ARCHITECT, LANDSCAPE ARCHITECT OR PROFESSIONAL ENGINEER MUST SOIL, ALTER, OR OTHERWISE TO ALTER EXTENT OF THE ALTERATION ON THE PROFESSIONAL ENGINEER, ARCHITECT, LANDSCAPE ARCHITECT OR PROFESSIONAL ENGINEER.

"UNAUTHORIZED ALTERATIONS OR ADDITIONS TO A SURVEY MAP BEARING A LICENSED LAND SURVEYOR'S EMBOSSED SEAL IS A VIOLATION OF SECTION 7209, SUBDIVISION 2, OF THE NEW YORK STATE EDUCATION LAW."

"ONLY COPIES FROM THE ORIGINAL TRACING OF THIS SURVEY MAP MARKED WITH THE LAND SURVEYOR'S EMBOSSED SEAL SHALL BE CONSIDERED TO BE VALID TRUE COPIES."

"CERTIFICATION INDICATES WERE ON SCRIPT ONLY THIS SURVEY WAS PREPARED IN ACCORDANCE WITH EXISTING COMMERCIAL STANDARDS FOR LAND SURVEYORS ADOPTED BY THE ALLIANCE - ALTSCAN LAND TITLE SURVEY SPECIFICATION. SUB-SURFACE OR ENVIRONMENTAL CONDITIONS WERE NOT EXAMINED OR CONSIDERED. THIS MAP WAS PREPARED FOR THE EXCLUSIVE USE OF THE PARTIES LISTED HEREON. ANY USE OF REPRODUCTION BY OTHER INDIVIDUALS, INSTITUTIONS, THEIR SUCCESSORS AND/OR ASSIGNS OR SUBSEQUENT OWNERS."

STATE OF NEW YORK · RYAN A. NASHER · 089066

RYAN A. NASHER, P.E.
N.Y.S. P.E. LIC. NO. 89066

STATE OF NEW YORK · JOHN R. ATZL · 50228

JOHN R. ATZL
N.Y.S. P.E. LIC. NO. 50228

REVISION	DATE	DESCRIPTION
6	12-17-24	PER PB MTG 9-3-24
5	7-25-24	PER PB MTG 7-9-24
4	5-16-24	FULL PLAN SET
3	2-15-24	NARR & APP 2-8-24
2	10-23-23	REVISE BUILDINGS, ADD FENCE & PLANTINGS
1	9-13-23	REVISE APPLICANT

ATZL, NASHER & ZIGLER P.C.
ENGINEERS-SURVEYORS-PLANNERS
232 North Main Street
New City, New York 10956
Tel: (845) 634-4694
Fax: (845) 634-5543
E-mail: info@anzny.com
Web: www.ANZNY.com

PROJECT:

UNION ROAD TOWNHOMES

VILLAGE OF NEW HEMPSTEAD
ROCKLAND COUNTY, NEW YORK

TITLE:

CONSTRUCTION PHASING PLAN

DRAWN BY: IS	CHECKED BY: JRA
DATE: AUGUST 30, 2023	SCALE: 1 IN. = 30 FT.
PROJECT NO: 3193	DRAWING NO: 6

P:\DWG\3193\3193\3193 UNION ROAD TOWNHOMES & SURVEY 12-28-24.DWG

PLANTING SPECIFICATIONS:

GENERAL: ALL PLANTS, TREES, AND SHRUBS SHALL MEET THE SPECIFICATIONS FOR "PLANT MATERIAL" AS PER THE AMERICAN STANDARD FOR NURSERY STOCK. THE LANDSCAPE ARCHITECT RESERVES THE RIGHT TO INSPECT ALL PLANTS PRIOR TO SHIPPING AND INSTALLATION. THERE ARE TO BE NO SUBSTITUTIONS OF THE PLANTS WITHOUT THE CONSENT OF THE LANDSCAPE ARCHITECT.

PLANTING: ALL PLANTS SHALL BE PLANTED IN PITS TWO TIMES THE DIAMETER OF THE ROOT BALL OR CONTAINER. PLANT HEIGHT SHOULD BE PLACED AT OR SLIGHTLY ABOVE PREVIOUS GRADE. PULL BACK BURLAP FROM TOP OF BALL AND CUT WIRE ON TREE BASKET. ENSURE THAT THE BURLAP IS NOT EXPOSED ABOVE GRADE BECAUSE OF WATER LOSS. STAKING AND GUYING SHALL BE USED ONLY WHEN NECESSARY. WHEN THE METHOD IS USED, CARE SHOULD BE TAKEN TO PROTECT THE TREE BARK AND WIRES SHOULD BE REMOVED AS SOON AS POSSIBLE.

MULCHING: ALL PLANTING BEDS (EXCEPT GROUNDCOVER) SHALL BE MULCHED WITH THREE INCHES OF SHREDDED BARK TO CONSERVE WATER AND KEEP ROOTS COVERED DURING INTIAL GROWTH STAGE. DO NOT PLACE MULCH HEAVILY AROUND CROWN OF PLANTS.

WINTER CARE: ALL TREES AND SHRUBS SHALL BE SPRAYED WITH AN ANTI-DESICCANT THE FIRST NOVEMBER AFTER PLANTING.

WATERING: ALL PLANTS SHALL BE WATERED BY THE CONTRACTOR DURING THE INITIAL GROWTH STAGE. TREES, SHALL BE HAVILY WATERED SEVERAL TIMES DURING THE FIRST MONTH AFTER PLANTING AND THEN REGULARLY FOR THE NEXT TWO SUMMERS.

PLANT GUARANTEE: CONTRACTOR SHALL GUARANTEE ALL NEWLY INSTALLED PLANTS FORTWO-YEAR PROVIDED THAT THEY ARE GIVEN PROPER WATERING/CARE AND CONTRACTOR IS NOTIFIED OF UNHEALTHY STRESSED PLANTS IMMEDIATELY. THE TWO YEAR GUARANTEE WILL START AT THE TIME OF THE ISSUANCE OF THE CERTIFICATE OF OCCUPANY.

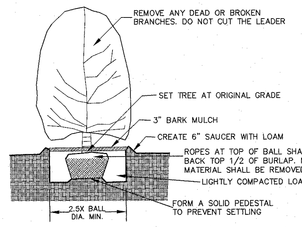

DECIDUOUS TREE PLANTING DETAIL

N.T.S.

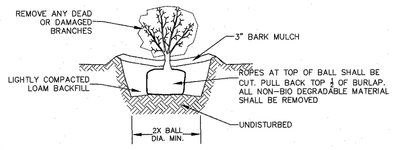

SHRUB PLANTING DETAIL

N.T.S.

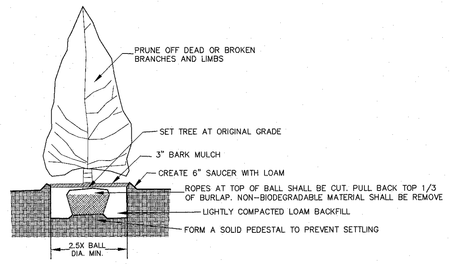

EVERGREEN PLANTING DETAIL

N.T.S.

PLANT LIST

SYMBOL	No.	PLANT NAME	SIZE	QUANTITY
PO	1.	QUERCUS PALUSTRIS Pin Oak	3" CAL.	43
CG	2.	THUJA PLICATA Green Giant Arborvitae	6 FT. TO 7 FT.	108
NS	3.	PICEA ABIES Norway Spruce	6 FT. TO 7 FT.	110
D	4.	CORNUS FLORIDA White Flowering Dogwood	6 FT. TO 7 FT.	5
AZ	5.	ASALEA spp 'DEL. VALLEY WHITE' Delaware White Azalea	3 GAL.	54
H	6.	HYDRANGEA macro. 'ENDLESS SUMMER' Endless Summer Hydrangea	5 GAL.	140
J	7.	JUNIPERUS chin. 'HETZII GLAUCA' Hetzi Juniper	2 FT. TO 3 FT.	70
CL	8.	ORUNUS laurocerasus 'OTTO LUTENS' Cherry Laurel	3 GAL.	50

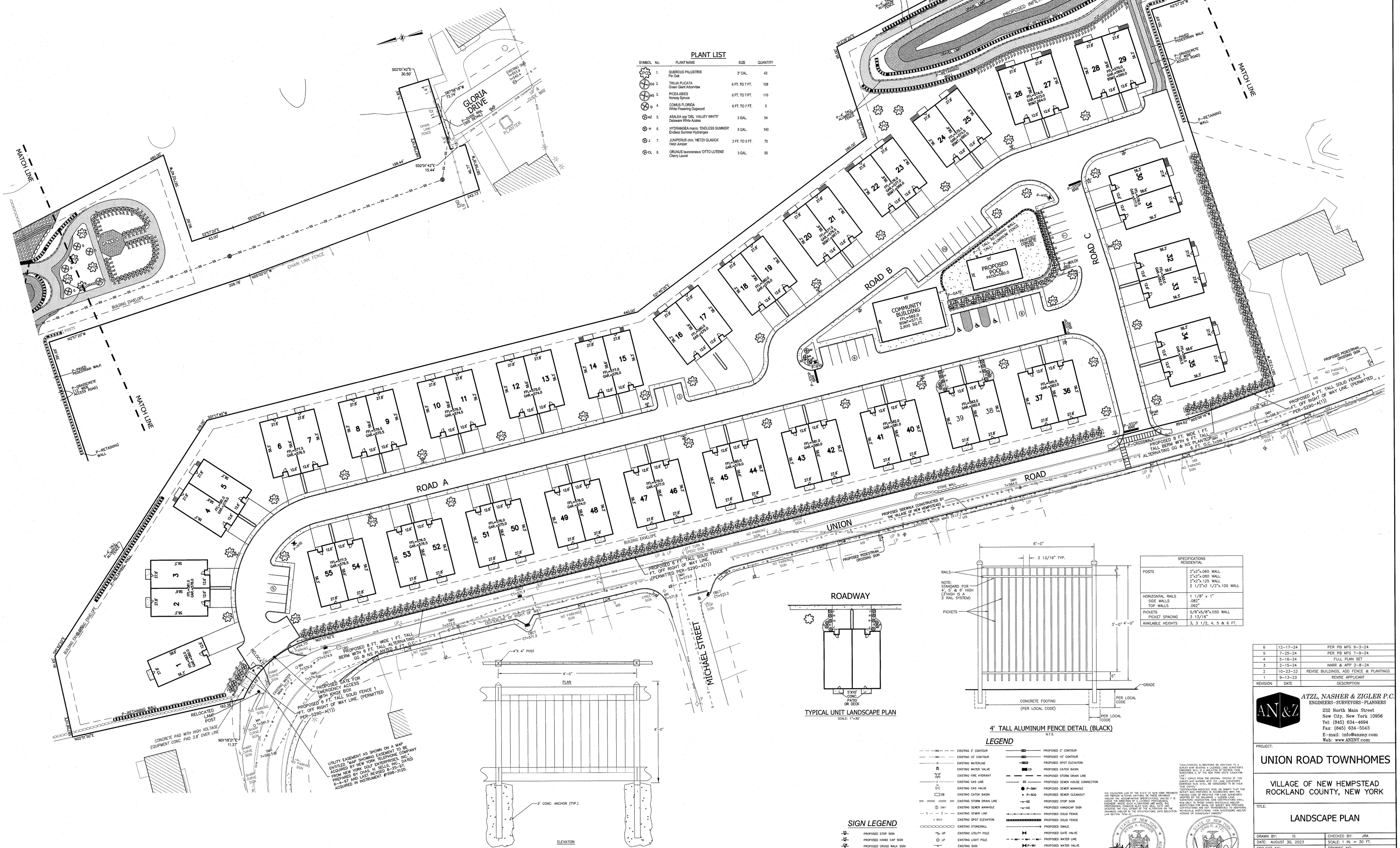

TYPICAL UNIT LANDSCAPE PLAN

SCALE: 1"=30'

6' TALL PVC FENCE DETAIL (BROWN OR TAN)

N.T.S.

SPECIFICATIONS RESIDENTIAL	
POSTS	2"x2"x.060 WALL 2"x2"x.080 WALL 2"x2"x.125 WALL 2 1/2"x3 1/2"x.100 WALL
HORIZONTAL RAILS	1 1/8" x 1"
SIDE WALLS	.062"
TOP WALLS	.062"
PICKETS	5/8"x5/8"x.050 WALL
PICKET SPACING	3 13/16"
AVAILABLE HEIGHTS	3, 3 1/2, 4, 5 & 6 FT.

4' TALL ALUMINUM FENCE DETAIL (BLACK)

N.T.S.

LEGEND

EXISTING 2' CONTOUR
EXISTING 10' CONTOUR
EXISTING WATERLINE
EXISTING WATER VALVE
EXISTING FIRE HYDRANT
EXISTING GAS LINE
EXISTING GAS VALVE
EXISTING CATCH BASIN
EXISTING STORM DRAIN LINE
EXISTING SEWER MANHOLE
EXISTING SEWER LINE
EXISTING SPOT ELEVATION
EXISTING STONEWALL
EXISTING UTILITY POLE
EXISTING LIGHT POLE
EXISTING SIGN
EXISTING WATER VALVE
EXISTING GAS VALVE
EXISTING LAMP POST
PROPOSED 2' CONTOUR
PROPOSED 10' CONTOUR
PROPOSED SPOT ELEVATION
PROPOSED CATCH BASIN
PROPOSED STORM DRAIN LINE
PROPOSED SEWER HOUSE CONNECTION
PROPOSED SEWER MANHOLE
PROPOSED SEWER CLEANOUT
PROPOSED STOP SIGN
PROPOSED HANDICAP SIGN
PROPOSED SOLID FENCE
PROPOSED SOLID FENCE
PROPOSED SWALE
PROPOSED GATE VALVE
PROPOSED WATER LINE
PROPOSED WATER VALVE
PROPOSED FIRE HYDRANT
PROPOSED WATER METER PIT
PROPOSED LAMP POST

SIGN LEGEND

PROPOSED STOP SIGN
PROPOSED HANDI CAP SIGN
PROPOSED CROSS WALK SIGN
PROPOSED PEDESTRIAN CROSSING SIGN
PROPOSED NO PARKING SIGN
PROPOSED NO PARKING ALONG ROADS SIGN

THE EDUCATION LAW OF THE STATE OF NEW YORK PROHIBITS ANY PERSON ACTING UNDER THE PROFESSIONAL SEAL OF ANOTHER PROFESSIONAL ENGINEER, OR UNDER THE DIRECTION OF A LICENSED PROFESSIONAL ENGINEER, WHERE SUCH ALTERATIONS ARE MADE, TO ALTER THE DOCUMENT IN ANY WAY. THE ALTERING ENGINEER TAKES THE FULL EXTENT OF THE ALTERATION ON THE DRAWINGS AND/OR IN THE SPECIFICATIONS. (NYS EDUCATION LAW SECTION 7209-2)

RYAN A. NASHER, P.E.
N.Y.S. P.E. LIC. NO. 89066

JOHN R. ATZL
N.Y.S. R.L.S. LIC. NO. 50228

"UNAUTHORIZED ALTERATIONS OR ADDITIONS TO A SURVEY MAP OR REPORT BEARING THE SEAL OF A LICENSED SURVEYOR IN VIOLATION OF SECTION 7209 OF SUBDIVISION 2, OF THE NEW YORK STATE EDUCATION LAW."

"ONLY COPIES FROM THE ORIGINAL TRACING OF THIS SURVEY MAP MARKED WITH THE LAND SURVEYOR'S EMBOSSED SEAL SHALL BE CONSIDERED TO BE VALID COPIES."

"THE EXCEPTION INDICATED HERE ON SIGNIFY THAT THIS SURVEY WAS PREPARED IN ACCORDANCE WITH THE EXISTING CODE OF PRACTICE FOR LAND SURVEYORS ADOPTED BY THE NEW YORK STATE ASSOCIATION OF SURVEYORS AND LAND CONTRACTORS SMALL RUN ONLY TO THOSE NAMED SURVEYORS AND PROFESSIONAL ENGINEERS FOR WHOM THE SURVEY WAS PREPARED, CERTIFICATIONS ARE NOT TRANSFERABLE TO ADDITIONAL INDIVIDUALS, INSTITUTIONS, THEIR SUCCESSORS AND/OR ASSIGNS OR SUBSEQUENT OWNERS."

REVISION	DATE	DESCRIPTION
6	12-17-24	PER PB MTG 9-3-24
5	7-25-24	PER PB MTG 7-9-24
4	5-16-24	FULL PLAN SET
3	2-15-24	NARR & APP 2-8-24
2	10-23-23	REVISE BUILDINGS, ADD FENCE & PLANTINGS
1	9-13-23	REVISE APPLICANT

ATZL, NASHER & ZIGLER P.C.
ENGINEERS-SURVEYORS-PLANNERS
232 North Main Street
New City, New York 10956
Tel: (845) 634-4694
Fax: (845) 634-5543
E-mail: info@anzny.com
Web: www.ANZNY.com

PROJECT:

UNION ROAD TOWNHOMES

VILLAGE OF NEW HEMPSTEAD
ROCKLAND COUNTY, NEW YORK

TITLE:

LANDSCAPE PLAN

DRAWN BY: IS	CHECKED BY: JRA
DATE: AUGUST 30, 2023	SCALE: 1 IN. = 30 FT.
PROJECT NO: 3193	DRAWING NO: 7

P:\DWG\ANZ\3193\3193 UNION ROAD TOWNHOMES & SURVEY 12-18-24.DWG

LEGEND

EXISTING 2' CONTOUR	PROPOSED 2' CONTOUR
EXISTING 10' CONTOUR	PROPOSED 10' CONTOUR
EXISTING WATERLINE	PROPOSED SPOT ELEVATION
EXISTING WATER VALVE	PROPOSED CATCH BASIN
EXISTING FIRE HYDRANT	PROPOSED STORM DRAIN LINE
EXISTING GAS LINE	PROPOSED SEWER HOUSE CONNECTION
EXISTING GAS VALVE	P-SMH PROPOSED SEWER MANHOLE
EXISTING CATCH BASIN	P-SCO PROPOSED SEWER CLEANOUT
EXISTING STORM DRAIN LINE	PROPOSED STOP SIGN
EXISTING SEWER MANHOLE	PROPOSED HANDICAP SIGN
EXISTING SEWER LINE	PROPOSED SOLID FENCE
EXISTING SPOT ELEVATION	PROPOSED SOLID FENCE
EXISTING STONEWALL	PROPOSED SWALE
EXISTING UTILITY POLE	PROPOSED GATE VALVE
EXISTING LIGHT POLE	PROPOSED WATER LINE
EXISTING SIGN	P-WV PROPOSED WATER VALVE
EXISTING WATER VALVE	P-HYD PROPOSED FIRE HYDRANT
EXISTING GAS VALVE	P-VM PROPOSED WATER METER PIT
EXISTING LAMP POST	PROPOSED LAMP POST

SIGN LEGEND

- PROPOSED STOP SIGN
- PROPOSED HANDI CAP SIGN
- PROPOSED CROSS WALK SIGN
- PROPOSED PEDESTRIAN CROSSING SIGN
- PROPOSED NO PARKING SIGN
- PROPOSED NO PARKING ALONG ROADS SIGN

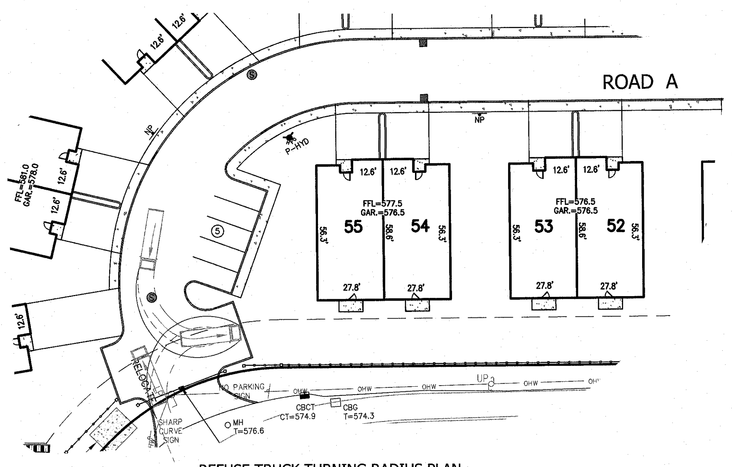

REFUSE TRUCK TURNING RADIUS PLAN
SCALE: 1"=30'

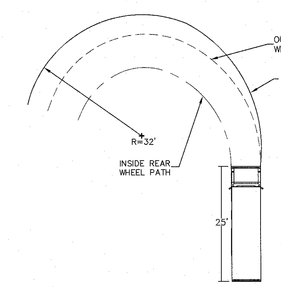

REFUSE TRUCK TURNING RADIUS DETAIL
SCALE: 1"=30'

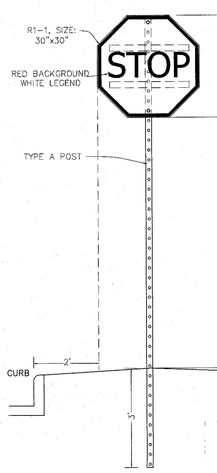

STOP SIGN DETAIL
N.T.S.

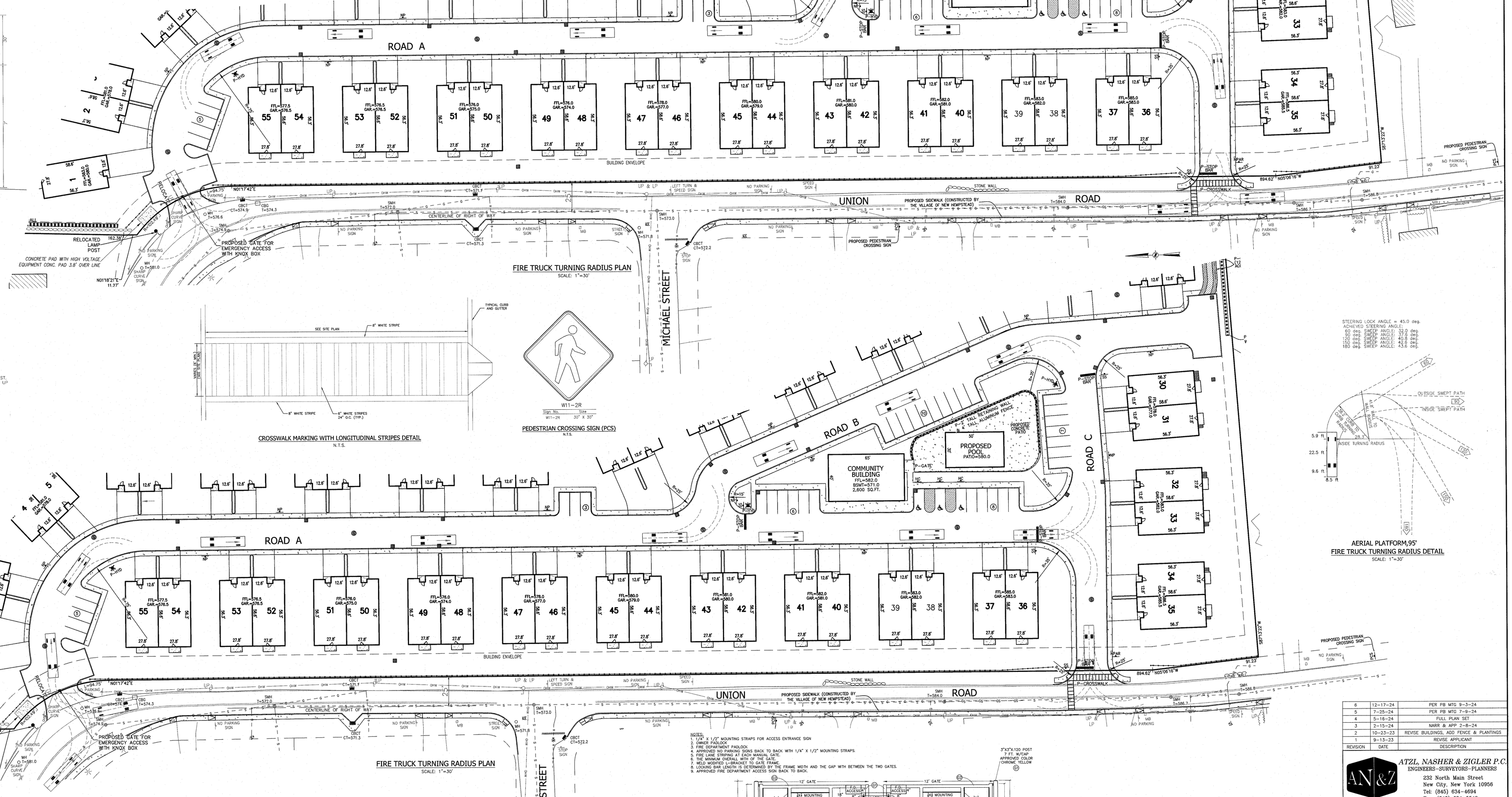

FIRE TRUCK TURNING RADIUS PLAN
SCALE: 1"=30'

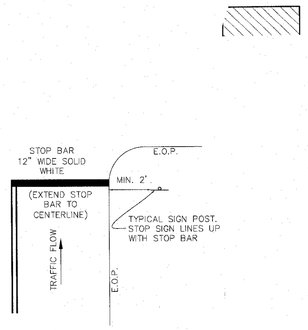

STOP BAR DETAIL
N.T.S.

CROSSWALK MARKING WITH LONGITUDINAL STRIPES DETAIL
N.T.S.

PEDESTRIAN CROSSING SIGN (PCS)
N.T.S.

FIRE TRUCK TURNING RADIUS PLAN
SCALE: 1"=30'

AERIAL PLATFORM,95'
FIRE TRUCK TURNING RADIUS DETAIL
SCALE: 1"=30'

NOTES:
1. 1/4" X 1/2" MOUNTING STRAPS FOR ACCESS ENTRANCE SIGN
2. OWNER PADLOCK
3. FIRE DEPARTMENT PADLOCK
4. APPROVED NO PARKING SIGNS BACK TO BACK WITH 1/4" X 1/2" MOUNTING STRAPS.
5. FIRE LANE STRIPING AT EACH MANUAL GATE.
6. 2"X2"X.120 RAILS APPROVED COLOR CHROME YELLOW
7. WELD MODIFIED L-BRACKET TO GATE FRAME.
8. LOCKING BAR LENGTH IS DETERMINED BY THE FRAME WIDTH AND THE GAP WITH BETWEEN THE TWO GATES.
9. APPROVED FIRE DEPARTMENT ACCESS SIGN BACK TO BACK.

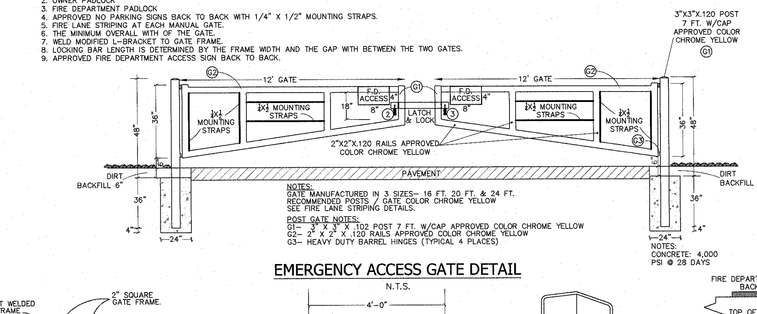

EMERGENCY ACCESS GATE DETAIL
N.T.S.

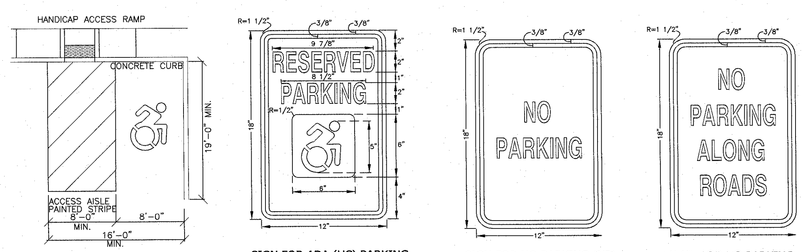

ADA ACCESSIBLE PARKING DETAIL
N.T.S.

SIGN FOR ADA (HC) PARKING
N.T.S.

SIGN FOR NO PARKING (NP)
N.T.S.

SIGN FOR NO PARKING ALONG ROAD (NPAR)
N.T.S.

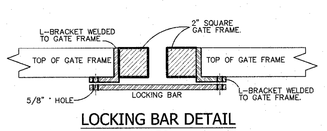

LOCKING BAR DETAIL
N.T.S.

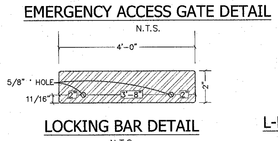

LOCKING BAR DETAIL
N.T.S.

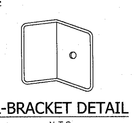

L-BRACKET DETAIL
N.T.S.

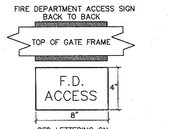

ACCESS SIGN DETAIL
N.T.S.

"UNAUTHORIZED ALTERATIONS OR ADDITIONS TO A SURVEY MAP BEARING A LICENSED LAND SURVEYOR'S EMBOSSED SEAL IS A VIOLATION OF SECTION 7209, SUBDIVISION 2, OF THE NEW YORK STATE EDUCATION LAW."
"ONLY COPIES FROM THE ORIGINAL TRACING OF THIS SURVEY MAP BEARING THE LICENSED LAND SURVEYOR'S EMBOSSED SEAL SHALL BE CONSIDERED TO BE VALID TRUE COPIES."
"UNLESS OTHERWISE INDICATED HERE ON SIGNIFY THAT THIS SURVEY WAS PREPARED IN ACCORDANCE WITH THE EXISTING CODE OF PRACTICE FOR LAND SURVEYOR'S PRACTICE ADOPTED BY THE NEW YORK STATE SURVEYORS ASSOCIATION. THIS CERTIFICATION SHALL RUN ONLY TO THOSE NAMED INDIVIDUALS AND/OR ENTITIES LISTED ON THE FACE OF THE SURVEY MAP. CERTIFICATIONS ARE NOT TRANSFERABLE TO ADDITIONAL INDIVIDUALS, INSTITUTIONS, THEIR SUCCESSORS AND/OR ASSIGNS OR SUBSEQUENT OWNERS."

THE EDUCATION LAW OF THE STATE OF NEW YORK PROHIBITS ANY PERSON, ALTERING ANYTHING ON THESE DRAWINGS AND/OR SPECIFICATIONS UNLESS THE PERSON ALTERING IT IS ACTING UNDER THE DIRECTION OF A LICENSED PROFESSIONAL ENGINEER. WHERE SUCH ALTERATIONS ARE MADE, THE PROFESSIONAL ENGINEER SHALL ADD TO HIS SEAL THE COUPLER THE FULL EXTENT OF THE ALTERATION ON THE DRAWINGS AND/OR IN THE SPECIFICATIONS. (NYS EDUCATION LAW SECTION 7209-2)

STATE OF NEW YORK · RYAN A. NASHER · 089066

RYAN A. NASHER, P.E.
N.Y.S. P.E. LIC. NO. 89066

STATE OF NEW YORK · JOHN R. ATZL · 080228

JOHN R. ATZL
N.Y.S. P.L.S. LIC. NO. 80228

REVISION	DATE	DESCRIPTION
6	12-17-24	PER PB MTG 9-3-24
5	7-25-24	PER PB MTG 7-9-24
4	5-16-24	FULL PLAN SET
3	2-15-24	NARR & APP 2-8-24
2	10-23-23	REVISE BUILDINGS, ADD FENCE & PLANTINGS
1	9-13-23	REVISE APPLICANT

ATZL, NASHER & ZIGLER P.C.
ENGINEERS-SURVEYORS-PLANNERS
232 North Main Street
New City, New York 10956
Tel: (845) 634-4694
Fax: (845) 634-5543
E-mail: info@anzny.com
Web: www.ANZNY.com

PROJECT:

UNION ROAD TOWNHOMES

VILLAGE OF NEW HEMPSTEAD
ROCKLAND COUNTY, NEW YORK

TITLE:

FIRE AND REFUSE TRUCK TURNING AND SIGN DETAILS PLAN

DRAWN BY: IS	CHECKED BY: JRA
DATE: AUGUST 30, 2023	SCALE: 1 IN. = 30 FT.
PROJECT NO: 3193	DRAWING NO: 8

P:\DEAN\WINDOWS\3193\3193 UNION ROAD TOWNHOMES & SURVEY 12-18-24.DWG