P:\DRAWINGS\3193\3193 UNION ROAD TOWNHOMES & SURVEY 05-15-24.DWG

VICINITY MAP
SCALE: 1 IN. = 500 FT.

GENERAL NOTES:

1. THIS IS LOT 11.2, BLOCK 1 IN SECTION 50.05 AS SHOWN ON THE VILLAGE OF NEW HEMPSTEAD TAX MAP.
2. AREA = 9.2885 ACRES
3. ZONE: 1R-40
4. PROPOSED USE: ACTIVE ADULT RESIDENTIAL COMMUNITY (ARC)
5. RECORD OWNERS: UNION VILLAGE LLC, ONE EXECUTIVE BOULEVARD, SUITE 201, SUFFERN, NY 10901
6. APPLICANT: UNION VILLAGE LLC, ONE EXECUTIVE BOULEVARD, SUITE 201, SUFFERN, NY 10901
7. FIRE DISTRICT: MOLESTON
8. SCHOOL DISTRICT: EAST RAMAPO CENTRAL
9. WATER DISTRICT: NR1
10. WATER SUPPLY: VEOLIA
11. SEWER DISTRICT: R C No. 130 & 100
12. DATUM: USGS
13. ALL UTILITIES ARE EXISTING, AND ARE TO REMAIN.
14. THERE ARE NO CONVENANTS, DEED RESTRICTIONS, EASEMENTS, OR OTHER RESERVATIONS OF LAND RELATIVE TO THIS SITE, EXCEPT AS SHOWN ON SAID PLAN AND SUBJECT TO FINDINGS OF A COMPLETE AND UP TO DATE TITLE SEARCH.
15. NO SIGNS OTHER THAN THOSE ON THIS DRAWING ARE PERMITTED WITHOUT PRIOR PLANNING BOARD APPROVAL.
16. THE UNDERSIGNED, OWNER AND/OR APPLICANT, AS A CONDITION OF APPROVAL OF THIS SITE PLAN, HEREBY AGREES TO COMPLETE THE WITHIN SITE DEVELOPMENT PLAN AS DRAWN AND ALL IMPROVEMENTS SHOWN THEREON, AS A CONDITION OF THE ISSUANCE OF A BUILDING PERMIT. THE OWNER/APPLICANT IS AWARE THAT NO CHANGES IN THIS PLAN MAY BE MADE UNLESS APPROVED BY THE PLANNING BOARD.

APPLICANT ____________ DATE

OWNER ____________ DATE

OWNER ____________ DATE

17. EXISTING ELECTRICAL HOOK UPS SHALL BE UPGRADED TO MEET CODE.
18. PLANS ARE BASED ON FIELD ENGINEERING DATA AND CERTIFIED HERETO BY:

LICENSED PROFESSIONAL ENGINEER OR LAND SURVEYOR ____________ DATE

19. ALL CONSTRUCTION SHALL MEET CURRENT TOWN OF RAMAPO SPECIFICATIONS.

BULK REQUIREMENTS

ZONE 1R-40 / ARC	REQUIRED	PROPOSED
MINIMUM LOT AREA	2,000 SQ. FT.	9.2441 ACS.
MINIMUM LOT WIDTH	N/A	N/A
MINIMUM FRONT YARD	20 FT.	24 FT.
MINIMUM SIDE YARD	0 FT.	0 FT.
MINIMUM TOTAL SIDE YARDS	0 FT.	0 FT.
MINIMUM REAR YARD	10 FT.	10 FT.
MAXIMUM BUILDING HEIGHT	2 STORIES/35 FT.	2 STORIES/35 FT.
MAXIMUM BUILDING COVERAGE	45%	23%
DENSITY PER ACRE	6 UNITS *	5.9 OR 6 UNITS = 55 UNITS TOTAL

* PER FORBEARANCE AGREEMENT RECORDED IN THE ROCKLAND COUNTY CLERK'S OFFICE, INSTR. 2007-44358.

NET LOT AREA CALCULATION:
GROSS LOT AREA = 404,608 SQ.FT.
LESS 75% OF SLOPES 25%+ = - 1,932 SQ.FT.
NET LOT AREA = 402,676 SQ.FT.

DRAWING LIST

DRAWING No.	TITLE	ORIGIN DATE	LAST REVISION
DRAWING 1	SITE DEVELOPMENT PLAN	AUGUST 30, 2023	MAY 16, 2024
DRAWING 2	EXISTING CONDITION	AUGUST 30, 2023	MAY 16, 2024
DRAWING 3	GRADING PLAN	AUGUST 30, 2023	MAY 16, 2024
DRAWING 4	DETAILS	AUGUST 30, 2023	MAY 16, 2024
DRAWING 5	EROSION AND SEDIMENT CONTROL PLAN	AUGUST 30, 2023	MAY 16, 2024
DRAWING 6	CONSTRUCTION PHASING PLAN	AUGUST 30, 2023	MAY 16, 2024
DRAWING 7	LANDSCAPE PLAN	AUGUST 30, 2023	MAY 16, 2024
DRAWING 8	FIRE TRUCK TURNING PLAN	AUGUST 30, 2023	MAY 16, 2024

SUBDIVISION REFERENCE:
LOT 2 SUBDIVISION ENTITLED "NEW YORK COUNTY CLUB" FILED IN THE ROCKLAND COUNTY CLERK'S OFFICE ON OCTOBER 16, 2009, IN BOOK 128, PAGE 12, AS MAP No. 8068 & 8069.

LEGEND

EXISTING	PROPOSED
EXISTING 2' CONTOUR	PROPOSED 2' CONTOUR
EXISTING 10' CONTOUR	PROPOSED 10' CONTOUR
EXISTING WATERLINE	PROPOSED SPOT ELEVATION
EXISTING WATER VALVE	PROPOSED CATCH BASIN
EXISTING FIRE HYDRANT	PROPOSED STORM DRAIN LINE
EXISTING GAS LINE	PROPOSED SEWER HOUSE CONNECTION
EXISTING GAS VALVE	PROPOSED SEWER MANHOLE
EXISTING CATCH BASIN	PROPOSED STOP SIGN
EXISTING STORM DRAIN LINE	PROPOSED HANDICAP SIGN
EXISTING SEWER MANHOLE	PROPOSED SOLID FENCE
EXISTING SEWER LINE	PROPOSED SOLID FENCE
EXISTING SPOT ELEVATION	PROPOSED SWALE
EXISTING STONEWALL	PROPOSED GATE VALVE
EXISTING UTILITY POLE	PROPOSED WATER LINE
EXISTING LIGHT POLE	PROPOSED WATER VALVE
EXISTING SIGN	PROPOSED FIRE HYDRANT
EXISTING WATER VALVE	PROPOSED LAMP POST
EXISTING GAS VALVE	
EXISTING LAMP POST	

ROADWAY

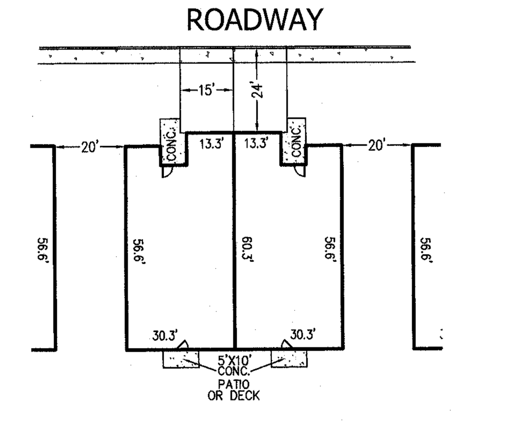

TYPICAL UNIT LAYOUT
SCALE: 1"=30'

THE EDUCATION LAW OF THE STATE OF NEW YORK PROHIBITS ANY PERSON ALTERING ANYTHING ON THESE DRAWINGS AND/OR THE ACCOMPANYING SPECIFICATIONS, UNLESS IT IS UNDER THE DIRECTION OF A LICENSED PROFESSIONAL ENGINEER. WHERE SUCH ALTERATIONS ARE MADE, THE PROFESSIONAL ENGINEER MUST SIGN, SEAL, DATE AND DESCRIBE THE FULL EXTENT OF THE ALTERATION ON THE DRAWINGS AND/OR IN THE SPECIFICATIONS (NYS EDUCATION LAW SECTION 7209-2).

"UNAUTHORIZED ALTERATIONS OR ADDITIONS TO A SURVEY MAP BEARING A LICENSED LAND SURVEYOR'S EMBOSSED SEAL IS A VIOLATION OF SECTION 7209, SUBDIVISION 2, OF THE NEW YORK STATE EDUCATION LAW."
"ONLY COPIES FROM THE ORIGINAL TRACING OF THIS SURVEY MAP MARKED WITH THE LAND SURVEYOR'S EMBOSSED SEAL SHALL BE CONSIDERED TO BE VALID TRUE COPIES."
"CERTIFICATIONS INDICATED HERE ON SIGNIFY THAT THIS SURVEY WAS PREPARED IN ACCORDANCE WITH THE EXISTING CODE OF PRACTICE FOR LAND SURVEYORS ADOPTED BY THE DELAWARE - HUDSON LAND SURVEYORS ASSOCIATION. SAID CERTIFICATIONS SHALL RUN ONLY TO THOSE NAMED INDIVIDUALS AND/OR INSTITUTIONS FOR WHOM THE SURVEY WAS PREPARED. CERTIFICATIONS ARE NOT TRANSFERABLE TO ADDITIONAL INDIVIDUALS, INSTITUTIONS, THEIR SUCCESSORS AND/OR ASSIGNS OR SUBSEQUENT OWNERS."

RYAN A. NASHER, P.E.
N.Y.S. P.E. LIC. NO. 89066

JOHN R. ATZL
N.Y.S. P.L.S. LIC. NO. 50228

REVISION	DATE	DESCRIPTION
4	5-16-24	FULL PLAN SET
3	2-15-24	NARR & APP 2-8-24
2	10-23-23	REVISE BUILDINGS, ADD FENCE & PLANTINGS
1	9-13-23	REVISE APPLICANT

AN&Z
ATZL, NASHER & ZIGLER P.C.
ENGINEERS-SURVEYORS-PLANNERS
232 North Main Street
New City, New York 10956
Tel: (845) 634-4694
Fax: (845) 634-5543
E-mail: info@anzny.com
Web: www.ANZNY.com

PROJECT:

UNION ROAD TOWNHOMES

VILLAGE OF NEW HEMPSTEAD
ROCKLAND COUNTY, NEW YORK

TITLE:

SITE DEVELOPMENT PLAN

DRAWN BY: IS	CHECKED BY: JRA
DATE: AUGUST 30, 2023	SCALE: 1 IN. = 30 FT.
PROJECT NO: 3193	DRAWING NO: 1

P:\DRAWINGS\13151\13151 UNION ROAD TOWNHOMES & SURVEY 06-13-24.DWG

REVISION	DATE	DESCRIPTION
4	5-16-24	FULL PLAN SET
3	2-15-24	NAME & APP 2-8-24
2	10-23-23	REVISE BUILDING, ADD FENCE & PLANTINGS
1	9-13-23	REVISE APPLICANT

ATZL, NASHER & ZIGLER P.C.
ENGINEERS-SURVEYORS-PLANNERS
232 North Main Street
New City, New York 10956
Tel: (845) 634-4694
Fax: (845) 634-5543
E-mail: info@atzlnz.com
Web: www.ANZNY.com

PROJECT:

UNION ROAD TOWNHOMES

VILLAGE OF NEW HEMPSTEAD
ROCKLAND COUNTY, NEW YORK

TITLE:

EXISTING CONDITION

DRAWN BY: IS CHECKED BY: JSA

DATE: AUGUST 30, 2023 SCALE: 1 IN. = 30 FT.

PROJECT NO: 3193 DRAWING NO: 2

LEGEND

EXISTING 2' CONTOUR	PROPOSED 2' CONTOUR
EXISTING 10' CONTOUR	PROPOSED 10' CONTOUR
EXISTING WATERLINE	PROPOSED SPOT ELEVATION
EXISTING WATER VALVE	PROPOSED CATCH BASIN
EXISTING FIRE HYDRANT	PROPOSED STORM DRAIN LINE
EXISTING GAS LINE	PROPOSED SEWER HOUSE CONNECTION
EXISTING GAS VALVE	PROPOSED SEWER MANHOLE
EXISTING CATCH BASIN	PROPOSED STOP SIGN
EXISTING STORM DRAIN LINE	PROPOSED HANDICAP SIGN
EXISTING SEWER MANHOLE	PROPOSED SOLID FENCE
EXISTING SEWER LINE	PROPOSED SOLID FENCE
EXISTING SPOT ELEVATION	PROPOSED SWALE
EXISTING STONEWALL	PROPOSED GATE VALVE
EXISTING UTILITY POLE	PROPOSED WATER LINE
EXISTING LIGHT POLE	PROPOSED WATER VALVE
EXISTING SIGN	PROPOSED FIRE HYDRANT
EXISTING WATER VALVE	PROPOSED LAMP POST
EXISTING GAS VALVE	
EXISTING LAMP POST	

NOTES :
1. MINIMUM 4,000 P.S.I. CONCRETE AT 28 DAYS WITH 5.5% A.E.
2. REINFORCEMENT–A.S.T.M. A615 GRADE 60,MINIMUM 1 1/2" COVER
3. ALL EXPOSED EDGES ARE CHAMFERED 1"
4. MATERIAL AND CONSTRUCTION SHALL COMPLY WITH PENN. D.O.T. PUB. 408
5. APPROX. WEIGHTS : 36" = 8,150 LBS.

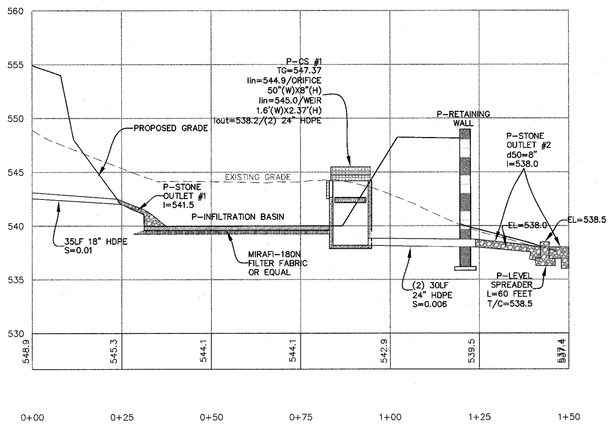

PROPOSED INFILTRATION BASIN PROFILE
SCALE: H/1"=20' V/1"=10'

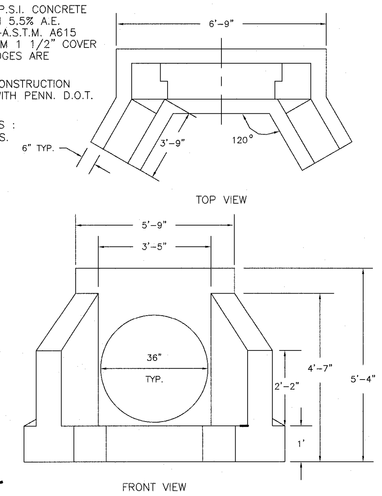

HEADWALL DETAIL
N.T.S.

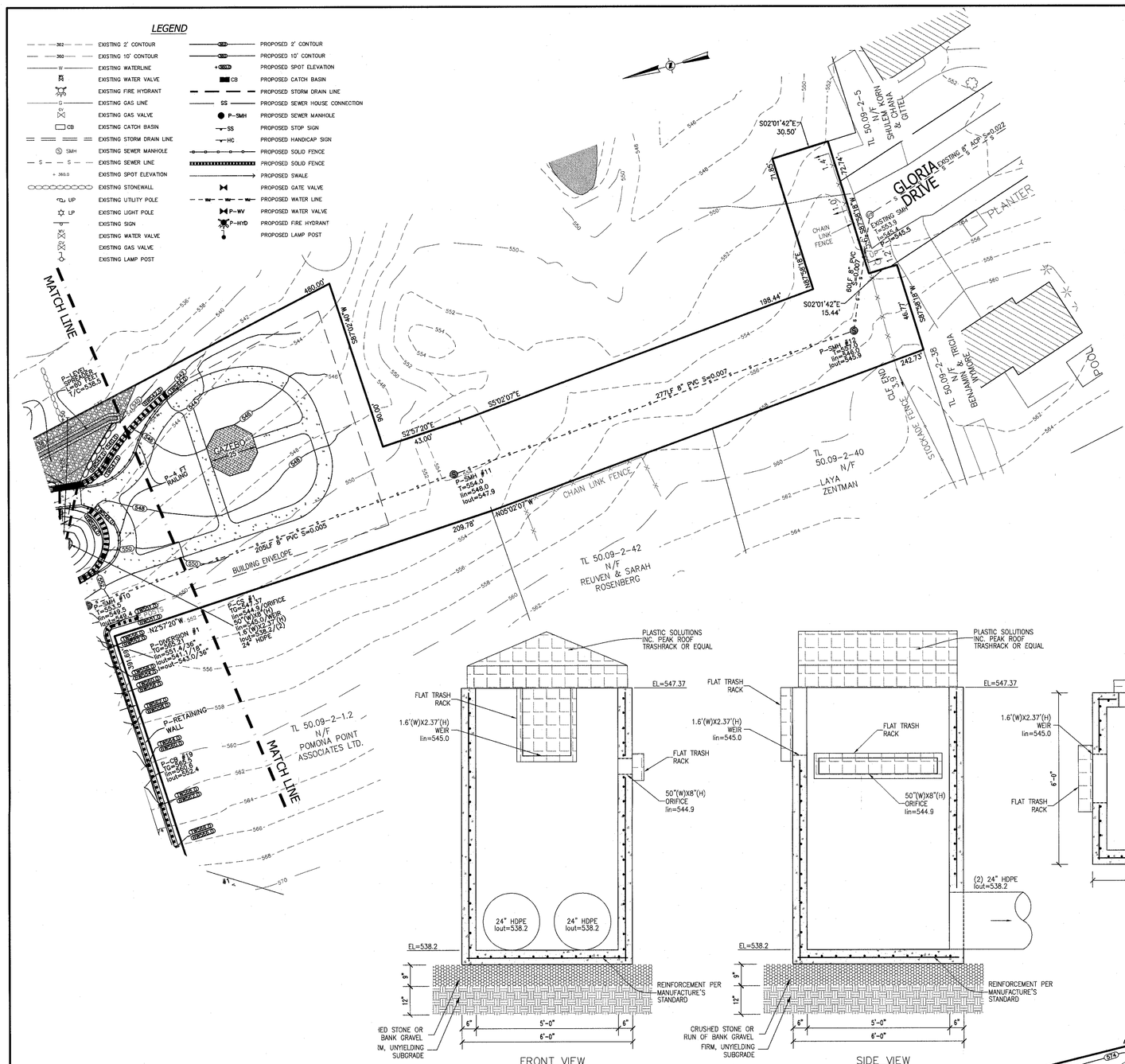
MATCH LINE
GLORIA DRIVE
TL 50.09-2-2 N/F GLORIA SMITH
TL 50.09-2-40 N/F LAYA ZENTMAN
TL 50.09-2-42 N/F REUVEN & SARAH ROSENBERG
TL 50.09-2-1.2 N/F POMONA POINT ASSOCIATES LTD.
BUILDING ENVELOPE
CHAIN LINK FENCE
POOL
PLANTER
S02°01'42"E 30.50'
S02°01'42"E 15.44'
N02°01'42"W 209.78'
S52°57'20"E 43.00'
S01°02'07"E 209.00'
N87°58'18"E 440.00'
N02°01'42"W 440.00'
S01°17'40"W 210.00'
N01°18'21"E 11.27'
N02°51'50"E 162.38'
S02°51'50"E 210.00'
N02°01'42

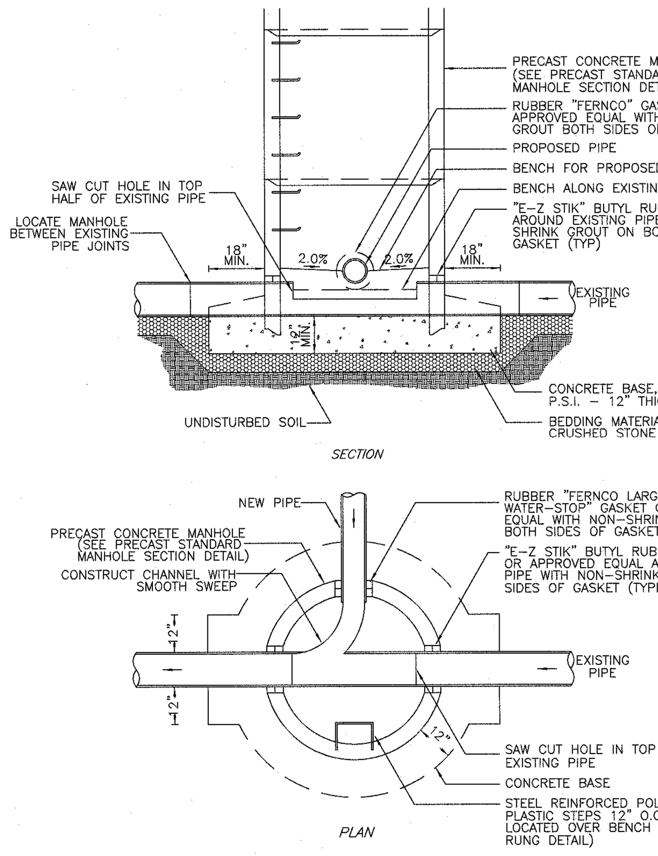

ROCKLAND COUNTY SEWER DISTRICT NO. 1
EXISTING SEWER CONNECTION DETAIL
N.T.S.

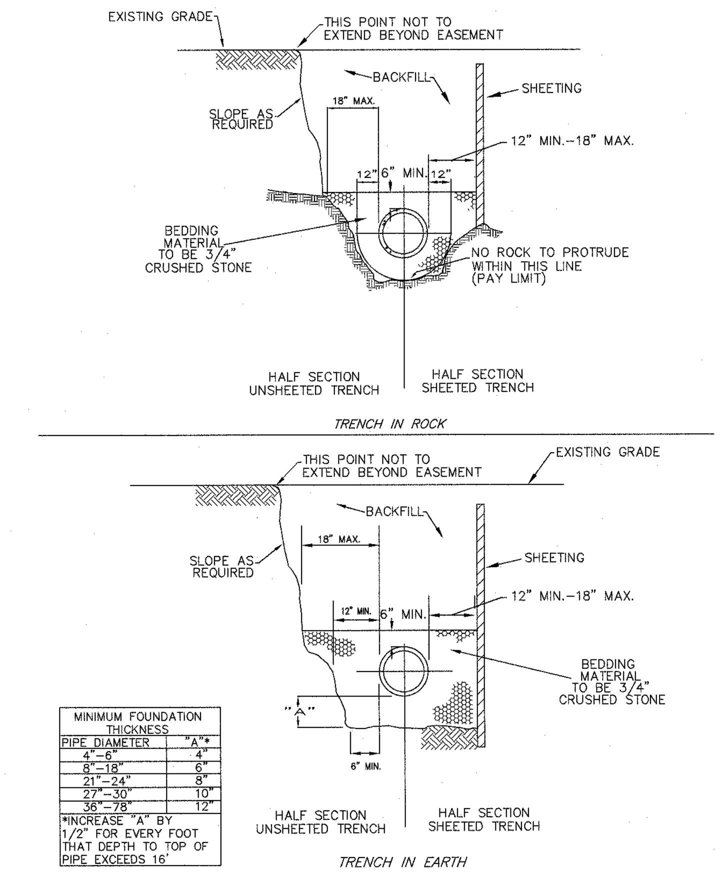

MINIMUM FOUNDATION THICKNESS	
PIPE DIAMETER	"A"*
4"-6"	4"
8"-18"	6"
21"-24"	8"
27"-30"	10"
36"-78"	12"

*INCREASE "A" BY 1/2" FOR EVERY FOOT THAT DEPTH TO TOP OF PIPE EXCEEDS 16'

ROCKLAND COUNTY SEWER DISTRICT NO. 1
TRENCH SECTIONS
N.T.S.

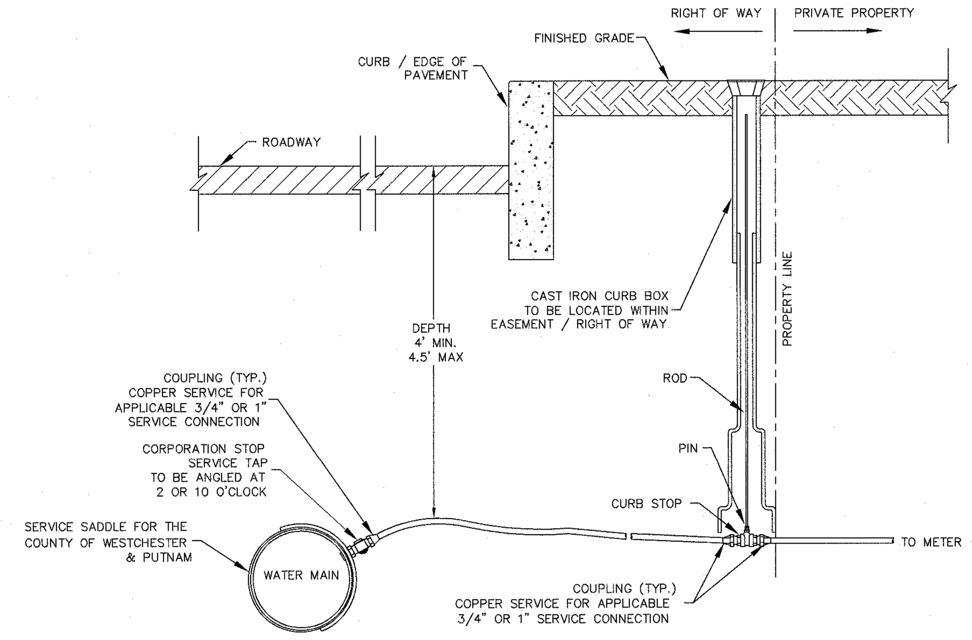

DOMESTIC SERVICE CONNECTION
3/4" & 1" SERVICE CONNECTION
N.T.S.

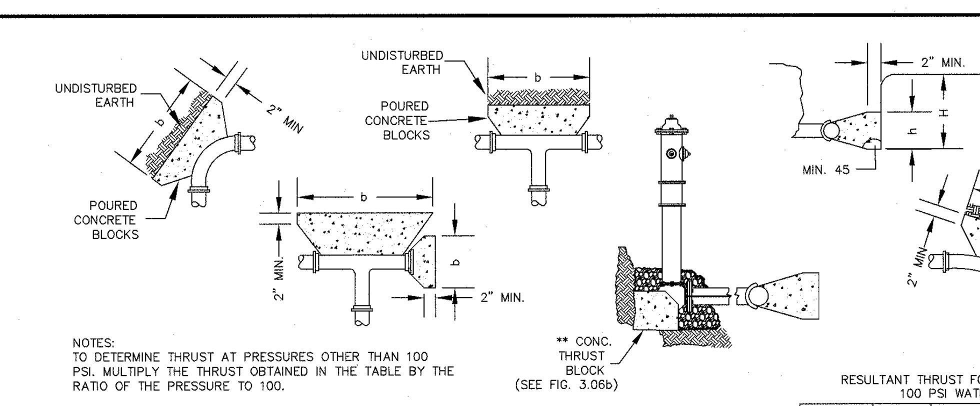

NOTES:
TO DETERMINE THRUST AT PRESSURES OTHER THAN 100 PSI, MULTIPLY THE THRUST OBTAINED IN THE TABLE BY THE RATIO OF THE PRESSURE TO 100.

BEARING AREA (SF) = THRUST FORCE AT FITTING (LB.S) / BEARING CAPACITY OF UNDISTURBED SOIL (LB.S/S.F)

GRAVITY BLOCK SIZE (C.F.) = THRUST FORCE AT FITTING (LB.S) / CONCRETE DENSITY 145 (LB.S/C.F)

NOTES:
1. PLACE 8 MIL. POLYETHYLENE BETWEEN CONCRETE AND FITTING (CONCRETE SHALL NOT INTERFERE WITH JOINT.)
2. MINIMUM CONCRETE THICKNESS SHALL BE 12 INCHES.
THE HORIZONTAL DIMENSION (b) OF THE BEARING AREA SHALL BE BETWEEN 1.0 AND 2.0 TIMES THE
3. VERTICAL DIMENSION (h). (h <= b <= 2h)
4. THE VERTICAL DIMENSION (n) OF THE BEARING AREA SHALL BE EQUAL TO ONE-HALF. THE TOTAL DEPTH (H) TO THE BOTTOM OF THE THRUST BLOCK BUT NOT LESS THAN THE OUTSIDE DIAMETER (Do) OF THE FITTING (Do < h <= H/2).
5. THRUST BLOCK ORIENTATION SHALL BE SUCH THAT THE CENTER OF FITTING CORRESPONDS WITH THE CENTER OF THE THRUST BLOCK.
6. THE MINIMUM ALLOWABLE ANGLE (EITHER VERTICAL OR HORIZONTAL) SHALL BE 45 DEGREES.

RESULTANT THRUST FORCE AT FITTINGS AT 100 PSI WATER PRESSURE

NOM. PIPE DIA. (IN)	DEAD END	90 BEND	45° BEND	22 1/2" BEND	11 1/4" BEND
3	1,232	1,742	943	481	241
4	1,810	2,559	1,385	706	355
* 6	3,739	5,288	2,862	1,459	733
8	6,433	9,097	4,923	2,510	1,261
10	9,677	13,685	7,406	3,776	1,897
12	13,685	19,353	10,474	5,340	2,683
14	18,385	26,001	14,072	7,174	3,604
16	23,779	33,628	18,199	9,278	4,661
18	29,865	42,235	22,858	11,653	5,855
20	36,644	51,822	28,046	14,298	7,183
24	52,279	73,934	40,013	20,398	10,249
30	80,425	113,738	61,554	31,380	15,766
36	115,209	162,931	88,177	44,952	22,585
42	155,528	219,950	119,036	60,684	30,489
48	202,683	280,637	155,127	79,083	39,733
54	260,214	367,999	199,160	101,531	51,011
60	298,121	42,606	228,172	116,321	58,442
64	338,707	479,004	259,235	132,157	66,398

TYPICAL THRUST BLOCKING DETAILS
N.T.S.

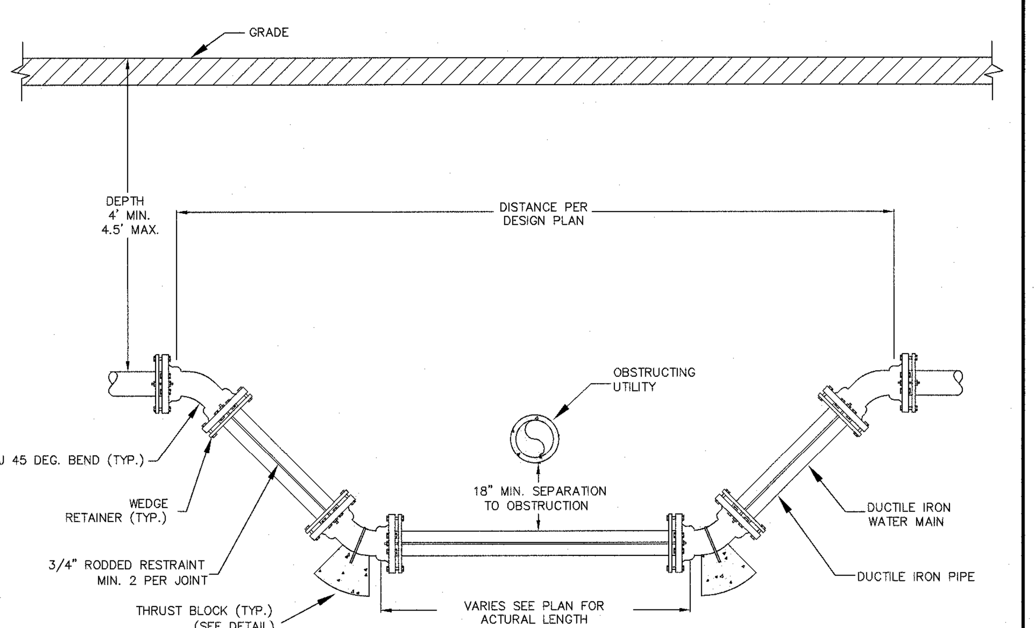

TYPICAL WATER MAIN OFFSET
N.T.S.

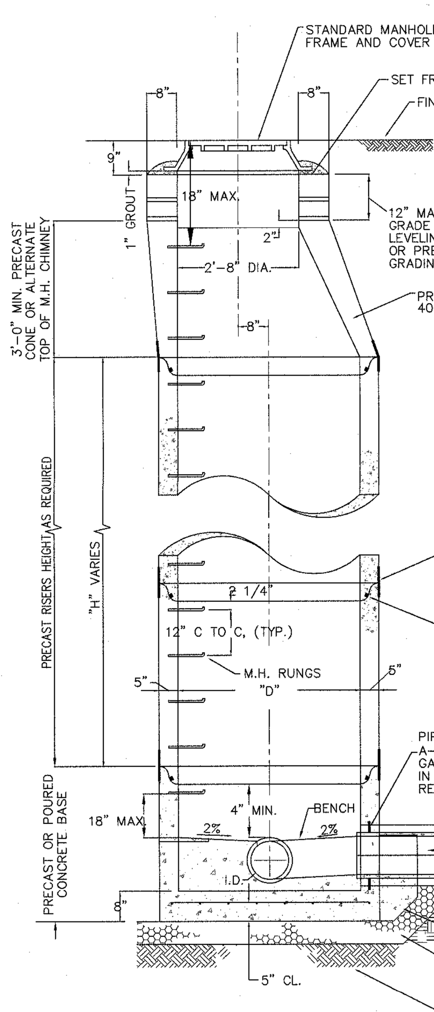

DIAMETER OF MANHOLE	
THRU PIPE SIZE(INCHES)	"D" (FT-INCHES)
24" & SMALLER	4'-0"
27"-30"	5'-0"
36"	6'-0"
42"	6'-6"
48"	7'-0"

ROCKLAND COUNTY SEWER DISTRICT NO. 1
PRECAST STANDARD MANHOLE SECTION
N.T.S.

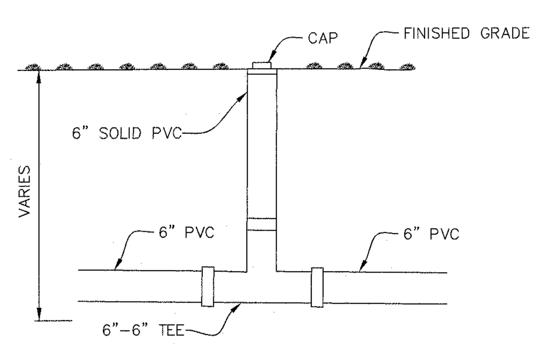

CLEANOUT DETAIL
N.T.S.

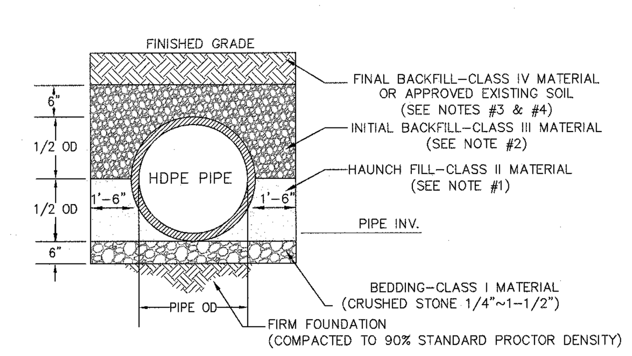

DRAINAGE TRENCH DETAIL
N.T.S.

PIPE STORAGE SYSTEM NOTES:

1. CLASS II MATERIAL CONSISTS OF CLEAN, COARSE GRAINED MATERIALS, SUCH AS GRAVEL, COARS SANDS AND GRAVEL/SAND MIXTURES (1-1/2 INCH IN SIZE). (AASHTO CLASSIFICATION A1 & A3)
2. CLASS III MATERIAL CONSISTS OF COARSE GRAINED MATERIALS WITH FINES INCLUDING SILTY OR CLAYEY GRAVELS OR SANDS. GRAVEL OR SAND MUST COMPRISE MORE THAN 50 PERCENT OF CLASS III MATERIALS.
3. CLASS IV MATERIAL CONSISTS OF FINE GRAINED MATERIALS, SUCH AS FINE SAND AND SOILS CONTAINING 50 PERCENT OR MORE CLAY OR SILT. SOILS CLASSIFIED AS IVa OR IVb WHICH HAVE PLASTICITY ARE NOT RECOMMENDED FOR EMBEDMENT ZONE.
4. USING EXISTING SOIL FOR FINAL BACKFILL IS ALLOWED ONLY IF IT IS FREE OF ORGANIC OR RECYCLED MATERIALS.

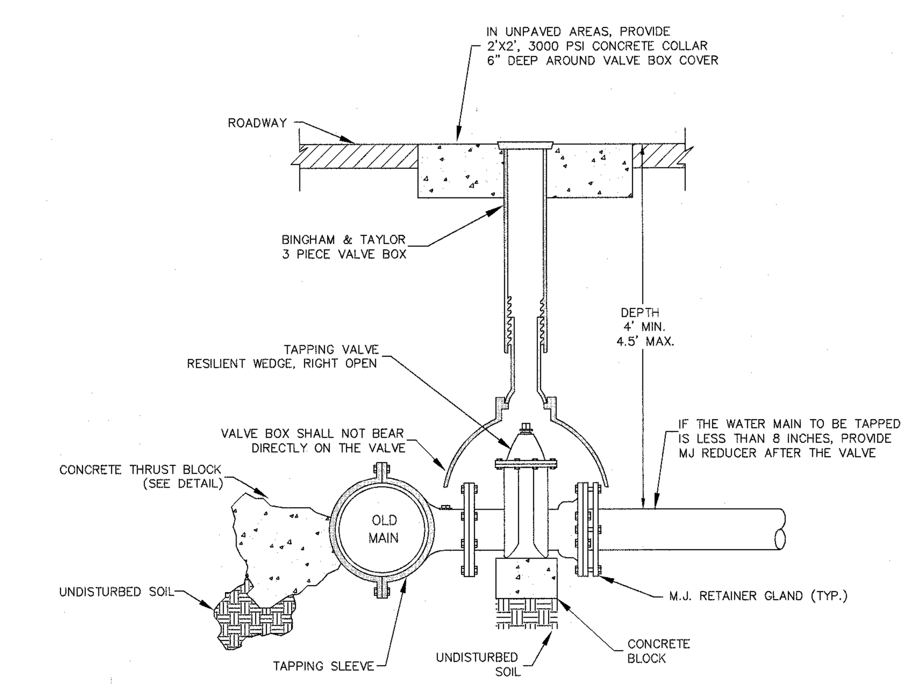

TAPPING EXISTING WATER MAIN
N.T.S.

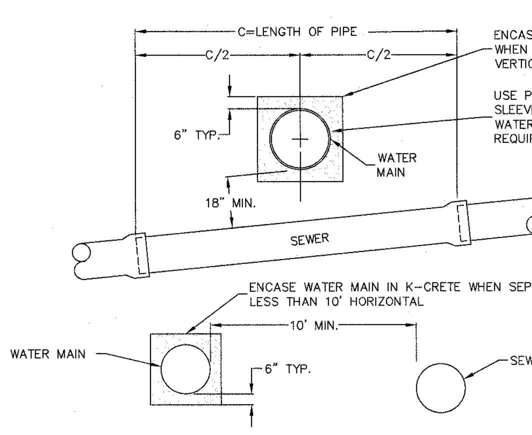

NOTES:
1. WATER MAINS CROSSING SEWERS SHALL BE LAID TO PROVIDE A MINIMUM VERTICAL DISTANCE OF 18" BETWEEN THE OUTSIDE OF THE WATER MAIN & THE OUTSIDE OF THE SEWER. THIS WILL BE THE CASE WHETHER THE WATER MAIN PASSES ABOVE OR BELOW THE SEWER.
2. AT CROSSINGS ONE FULL LENGTH OF SEWER PIPE SHALL BE LAID SO BOTH JOINTS WILL BE AS FAR FROM THE WATER MAIN AS POSSIBLE. SEE DETAIL. WHERE THE SEWER HAS ALREADY BEEN INSTALLED, THE WATER MAIN SHALL BE PLACED SO THAT THE JOINTS ON THE WATER MAIN ARE EQUIDISTANT FROM THE SEWER.
3. WATER MAINS SHALL BE LAID AT LEAST 10' HORIZONTALLY FROM ANY EXISTING OR PROPOSED SEWER. IN CASES WHERE THIS IS NOT POSSIBLE, THE REVIEWING AUTHORITY MAY ALLOW ENCASEMENT, IF SUPPORTED BY DATA FROM THE DESIGN ENGINEER.
4. NO WATER PIPE SHALL PASS THROUGH OR COME IN CONTACT WITH ANY SEWER MANHOLE.
5. IN THE EVENT THAT THERE IS A DEVIATION FROM ANY OF THE ABOVE REQUIREMENTS, SAID CHANGES MUST BE APPROVED BY THE COUNTY HEALTH DEPARTMENT PRIOR TO COMPLETION OF ANY SUCH CHANGES.

TYPICAL WATER & SEWER CROSSING AND SEPARATION
N.T.S.

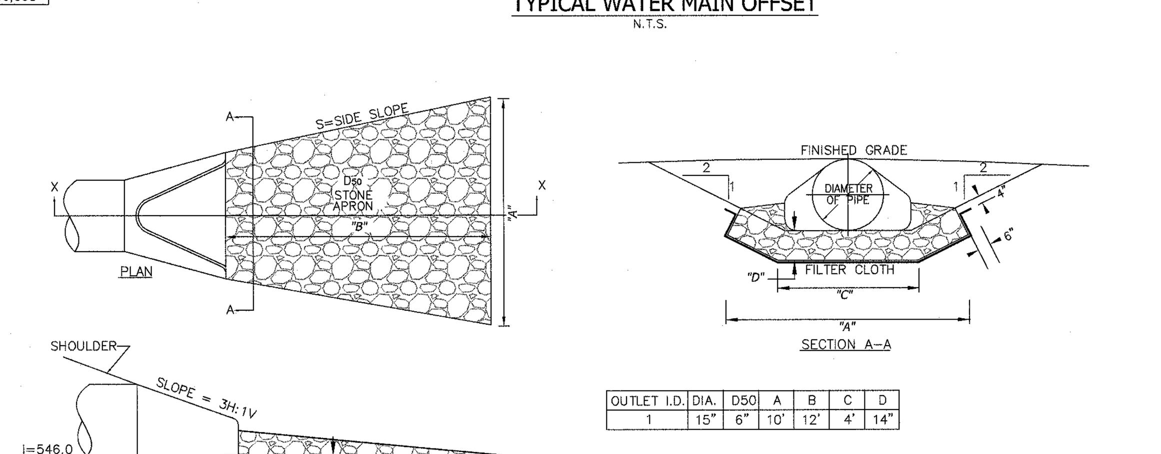

OUTLET	I.D. DIA.	D50	A	B	C	D
1	15"	6"	10'	12'	4'	14"

FLARED END SECTION #1 & APRON DETAIL FOR OUTLET
N.T.S.

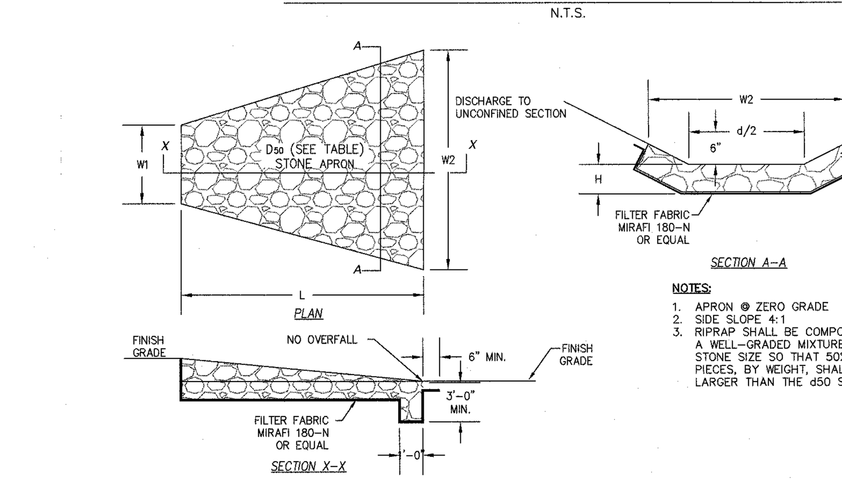

NOTES:
1. APRON @ ZERO GRADE
2. SIDE SLOPE 4:1
3. RIPRAP SHALL BE COMPOSED OF A WELL-GRADED MIXTURE OF STONE SIZE SO THAT 50% OF THE PIECES, BY WEIGHT, SHALL BE LARGER THAN THE d50 SIZE.

STONE OUTLET	D	D50	W1	W2	L	H
1	12"	6"	2 FT.	6 FT.	6 FT.	14"
2	18"	6"	10 FT.	8 FT.	20FT.	14"

STONE OUTLET #1 & #2 DETAIL
N.T.S.

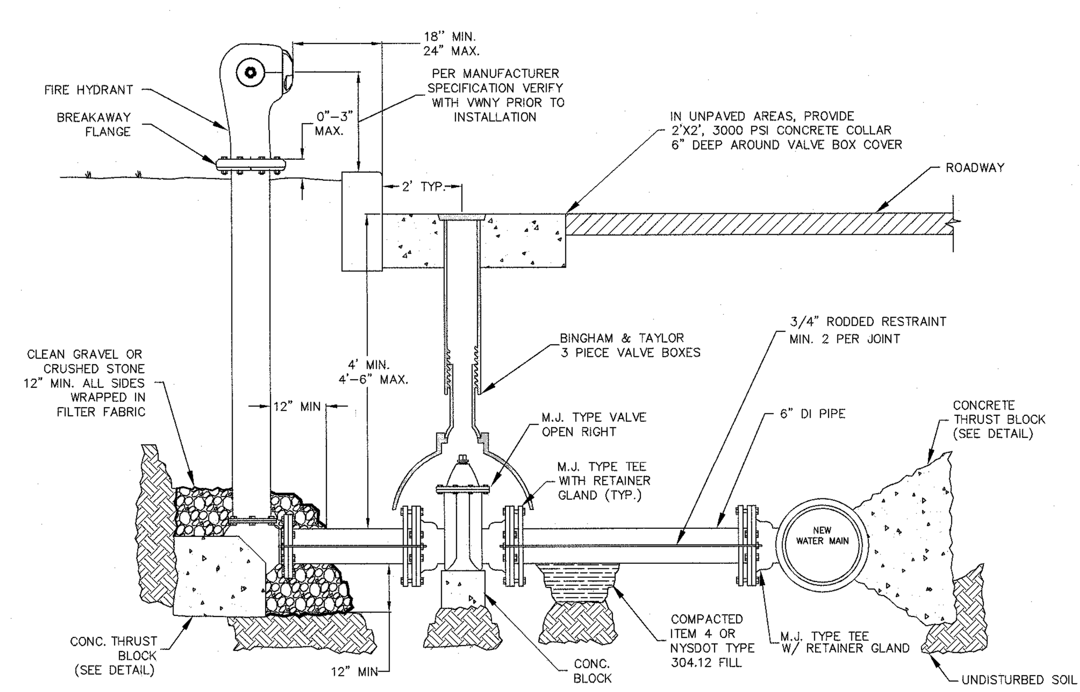

FIRE HYDRANT INSTALLATION DETAIL (NEW MAIN)
N.T.S.

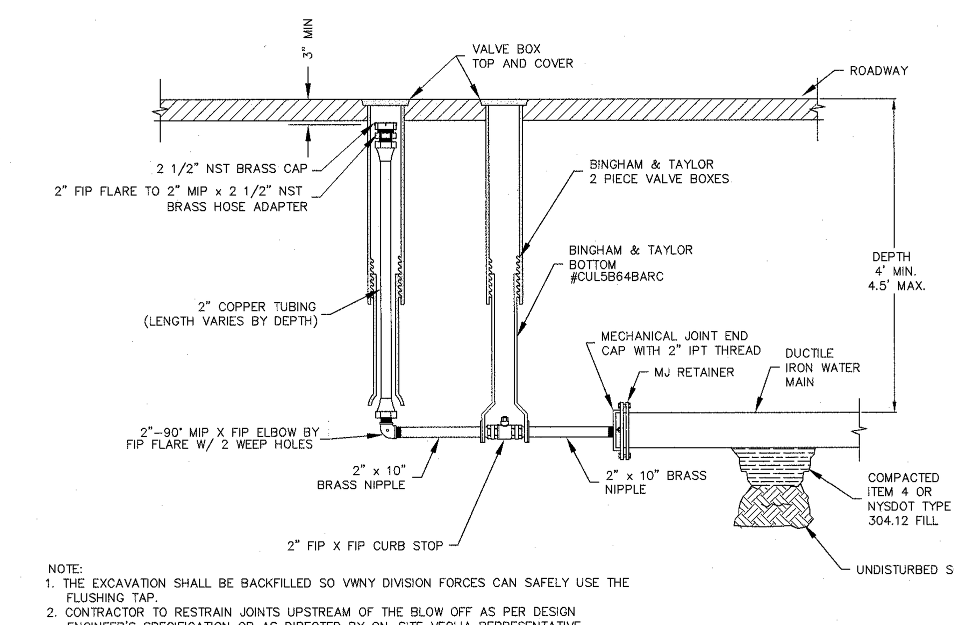

NOTE:
1. THE EXCAVATION SHALL BE BACKFILLED SO VWNY DIVISION FORCES CAN SAFELY USE THE FLUSHING TAP.
2. CONTRACTOR TO RESTRAIN JOINTS UPSTREAM OF THE BLOW OFF AS PER DESIGN ENGINEER'S SPECIFICATION OR AS DIRECTED BY ON-SITE VEOLIA REPRESENTATIVE

PERMANENT BLOW OFF ASSEMBLY
N.T.S.

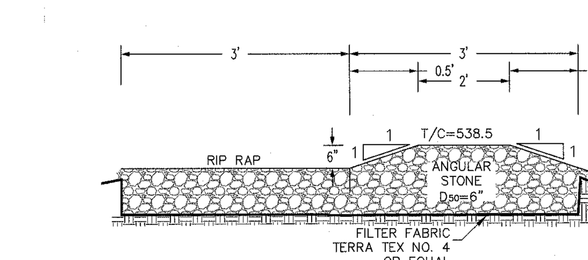

LEVEL SPREADER DETAIL
N.T.S.

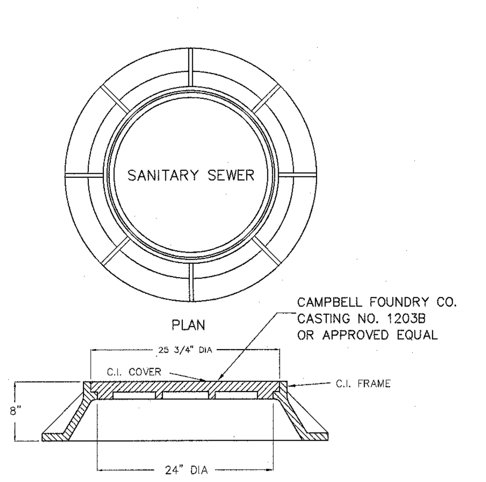

ROCKLAND COUNTY SEWER DISTRICT NO. 1
DETAIL OF STANDARD MANHOLE FRAME & COVER
N.T.S.

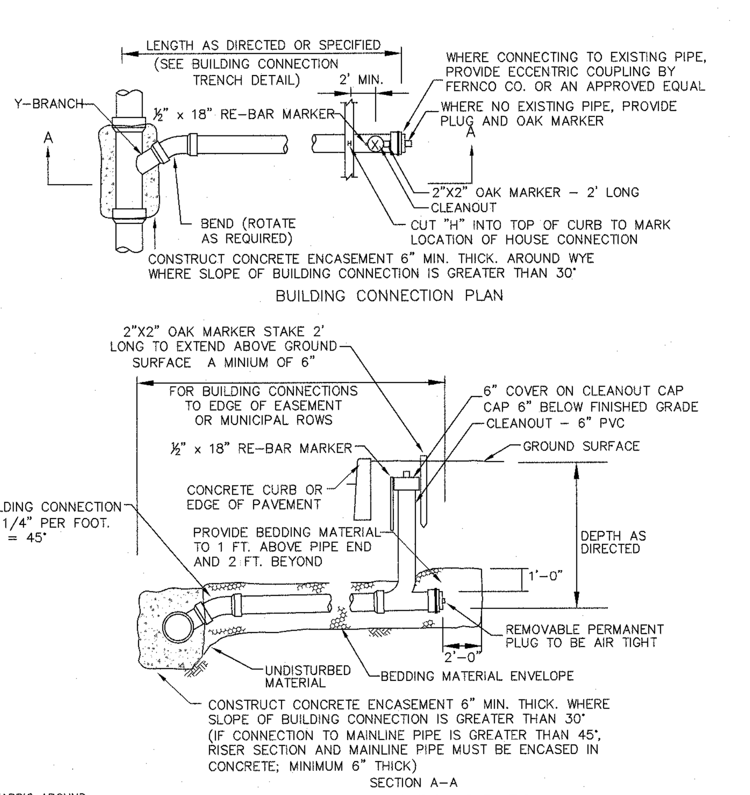

ROCKLAND COUNTY SEWER DISTRICT NO. 1
BUILDING CONNECTION DETAIL
N.T.S.

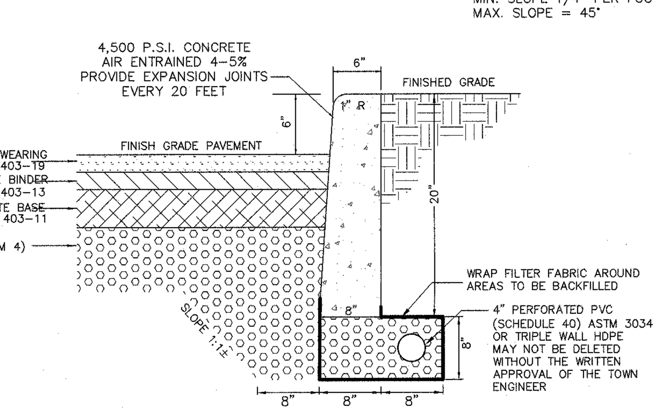

ASPHALTIC CONCRETE PAVEMENT & CONCRETE CURB AND UNDERDRAIN DETAIL FOR SUBURBAN STREETS
N.T.S.

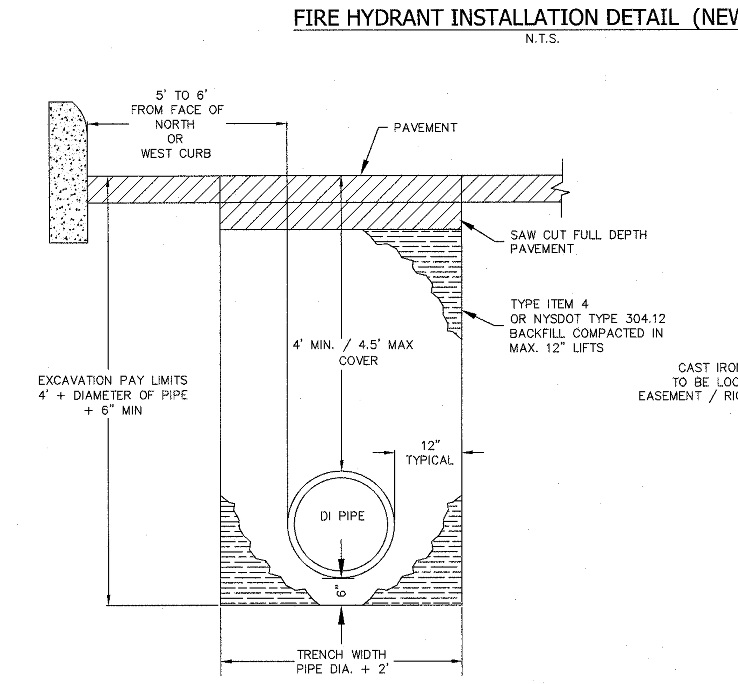

NOTE:
1. BACKFILL SHALL BE PLACED IN MINIMUM12" LIFTS AND COMPACTED USING MECHANICAL MEANS OF COMPACTION OR AS APPROVED BY VEOLIA WATER.
2. WOOD BLOCKING SHALL NOT BE USED BENEATH THE PIPE AS A MEANS OF SETTING GRADE.
3. ROCK AND SOIL EXCAVATION PAY LIMITS SHALL BE BASED ON A 4 FEET OF DEPTH, PLUS THE DIAMETER OF PIPE PLUS 6 INCHES OF BEDDING. THE TRENCH WIDTH SHALL BE BASED ON THE PIPE DIAMETER PLUS 24 INCHES. COSTS ASSOCIATED WITH OVER EXCAVATION SHALL BE AT THE CONTRACTOR'S EXPENSE.
4. PAVEMENT SHALL BE RESTORED IN ACCORDANCE WITH LOCAL, STATE, COUNTY PERMIT REQUIREMENTS, OR PRIVATE PROPERTY OWNER.

WATER MAIN TRENCH DETAIL ROADWAY (PUBLIC OR PRIVATE)
N.T.S.

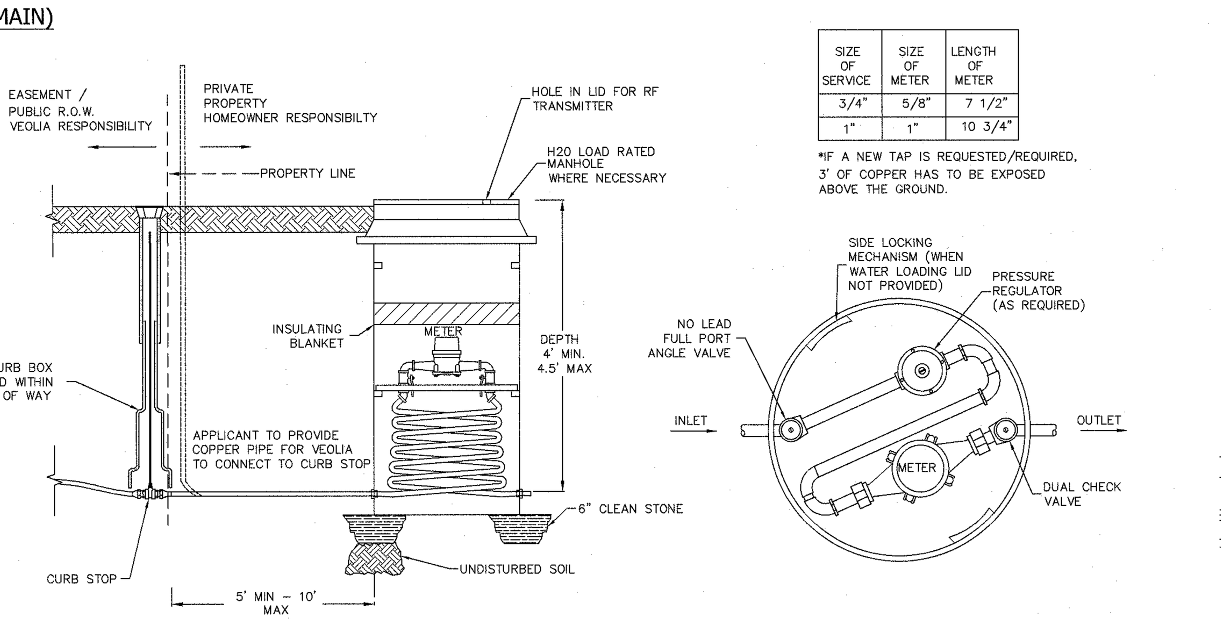

SIZE OF SERVICE	SIZE OF METER	LENGTH OF METER
3/4"	5/8"	7 1/2"
1"	1"	10 3/4"

*IF A NEW TAP IS REQUESTED/REQUIRED, 3' OF COPPER HAS TO BE EXPOSED ABOVE THE GROUND.

3/4" TO 1" DOMESTIC SERVICE - METER PIT
N.T.S.

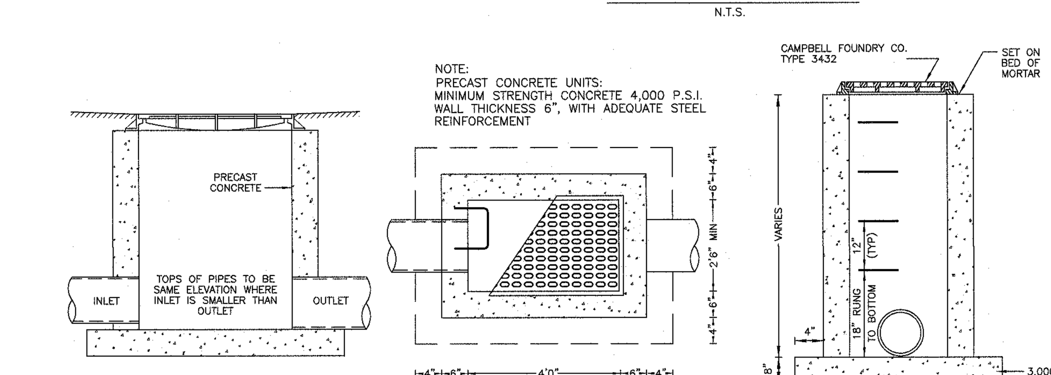

NOTE:
PRECAST CONCRETE UNITS: MINIMUM STRENGTH CONCRETE 4,000 P.S.I. WALL THICKNESS 6", WITH ADEQUATE STEEL REINFORCEMENT

STANDARD CATCH BASIN DETAIL
SCALE: N.T.S.

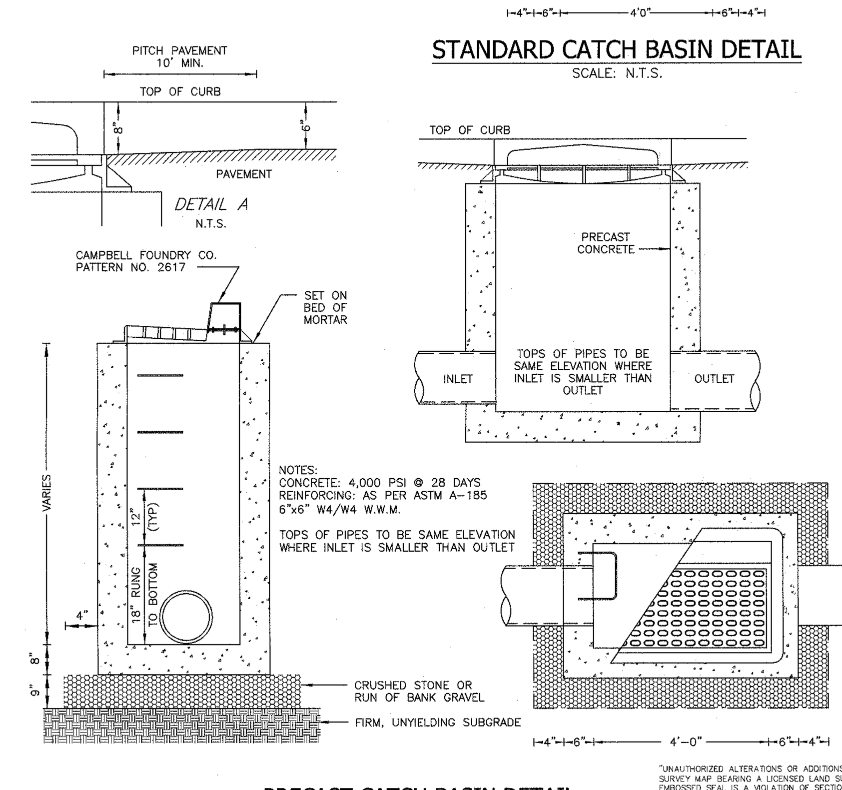

NOTES:
CONCRETE: 4,000 PSI @ 28 DAYS
REINFORCING: AS PER ASTM A-185
6"x6" W4/W4 W.W.M.
TOPS OF PIPES TO BE SAME ELEVATION WHERE INLET IS SMALLER THAN OUTLET

PRECAST CATCH BASIN DETAIL
N.T.S.

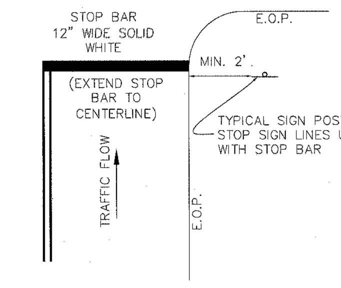

STOP BAR DETAIL
N.T.S.

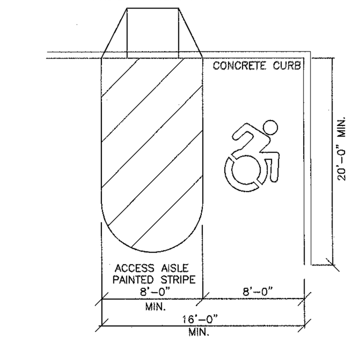

VAN ACCESSIBLE PARKING DETAIL
N.T.S.

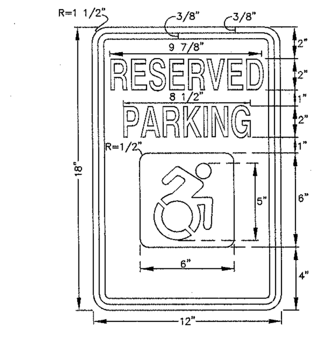

SIGN FOR HANDICAP (HC) PARKING
N.T.S.

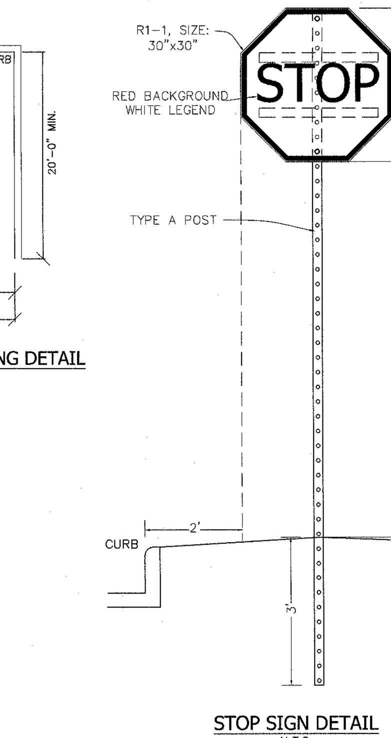

STOP SIGN DETAIL
N.T.S.

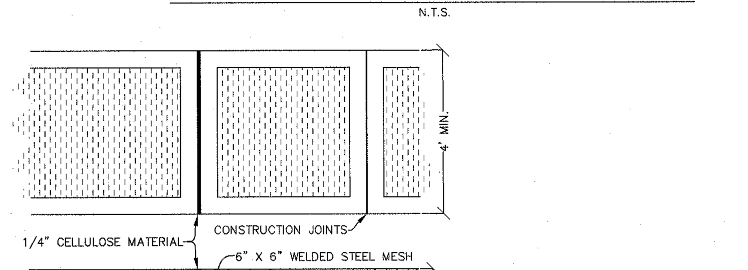

1. CONSTRUCTION JOINTS HAVING A 1/4 INCH RADIUS SHALL BE PLACED AT 4 FEET INTERVALS.
2. INSTALL EXPANSION JOINTS OF 1/4 INCH CELLULOSE MATERIAL OR EQUAL AT 20 FEET INTERVALS.
3. CONCRETE SHALL HAVE A MINIMUM COMPRESSIVE STRENGTH OF 4,500 PSI AT 28 DAYS.
4. CONCRETE SHALL BE AIR ENTRAINED 6% PLUS or MINUS 1%.
5. SIDEWALK REINFORCEMENT SHALL CONSIST OF #6 GUAGE 6" X 6" STEEL MESH PLACED 2 INCHES FROM THE BOTTOM OF THE SIDEWALK SLAB.

CONCRETE SIDEWALK DETAIL
N.T.S.

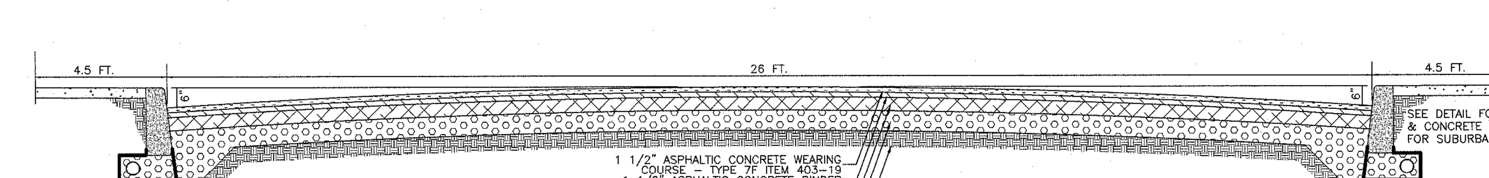

NOTE:
1. FIRM UNYIELDING SUBGRADE TO BE VERIFIED BY THE TOWN ENGINEER PRIOR TO REPLACEMENT OF SUBBASE COURSE.
2. SUBGRADE AND SUBBASE SHALL BE COMPACTED TO A MINIMUM OF 95% BY PROCTOR. DENSITY TESTING OF THE SUBGRADE AND SUBBASE MAY BE REQUIRED AT THE DISCRETION OF THE TOWN ENGINEER.

PAVEMENT CROSS-SECTION AND PAVEMENT DETAIL FOR SUBURBAN STREETS
N.T.S.

"UNAUTHORIZED ALTERATIONS OR ADDITIONS TO A SURVEY MAP BEARING A LICENSED LAND SURVEYOR'S EMBOSSED SEAL IS A VIOLATION OF SECTION 7209, SUBDIVISION 2, OF THE NEW YORK STATE EDUCATION LAW."
"ONLY COPIES FROM THE ORIGINAL TRACING OF THIS SURVEY MAP MARKED WITH THE LAND SURVEYOR'S EMBOSSED SEAL SHALL BE CONSIDERED TO BE VALID TRUE COPIES."
"CERTIFICATION INDICATED HERE ON SIGNIFY THAT THIS SURVEY WAS PREPARED IN ACCORDANCE WITH THE EXISTING CODE OF PRACTICE FOR LAND SURVEYS ADOPTED BY THE DELAWARE - HUDSON LAND SURVEYORS ASSOCIATION. SAID CERTIFICATIONS SHALL RUN ONLY TO THOSE NAMED INDIVIDUALS AND/OR INSTITUTIONS FOR WHOM THE SURVEY WAS PREPARED. CERTIFICATIONS ARE NOT TRANSFERABLE TO ADDITIONAL INSTITUTIONS OR SUBSEQUENT OWNERS AND/OR ASSIGNS OR SUBSEQUENT OWNERS."
THE EDUCATION LAW OF THE STATE OF NEW YORK PROHIBITS ANY PERSON ALTERING ANYTHING ON THESE DRAWINGS AND/OR THE ACCOMPANYING SPECIFICATIONS, UNLESS IT IS UNDER THE DIRECTION OF A LICENSED PROFESSIONAL ENGINEER. WHERE SUCH ALTERATIONS ARE MADE, THE ENGINEER MUST SIGN, SEAL, DATE AND DESCRIBE THE FULL EXTENT OF THE ALTERATION ON THE DRAWINGS AND/OR IN THE SPECIFICATIONS. (NYS EDUCATION LAW SECTION 7209-2)

RYAN A. NASHER, P.E.
N.Y.S. P.E. LIC. NO. 89066

JOHN R. ATZL
N.Y.S. P.L.S. LIC. NO. 50228

4	5-16-24	FULL PLAN SET
3	2-15-24	NARR & APP 2-8-24
2	10-23-23	REVISE BUILDINGS, ADD FENCE & PLANTINGS
1	9-13-23	REVISE APPLICANT
REVISION	DATE	DESCRIPTION

AN&Z
ATZL, NASHER & ZIGLER P.C.
ENGINEERS-SURVEYORS-PLANNERS
232 North Main Street
New City, New York 10956
Tel: (845) 634-4694
Fax: (845) 634-5543
E-mail: info@anzny.com
Web: www.ANZNY.com

PROJECT:
UNION ROAD TOWNHOMES

VILLAGE OF NEW HEMPSTEAD
ROCKLAND COUNTY, NEW YORK

TITLE:
DETAILS

DRAWN BY: IS	CHECKED BY: JRA
DATE: AUGUST 30, 2023	SCALE: AS SHOWN
PROJECT NO: 3193	DRAWING NO: 4

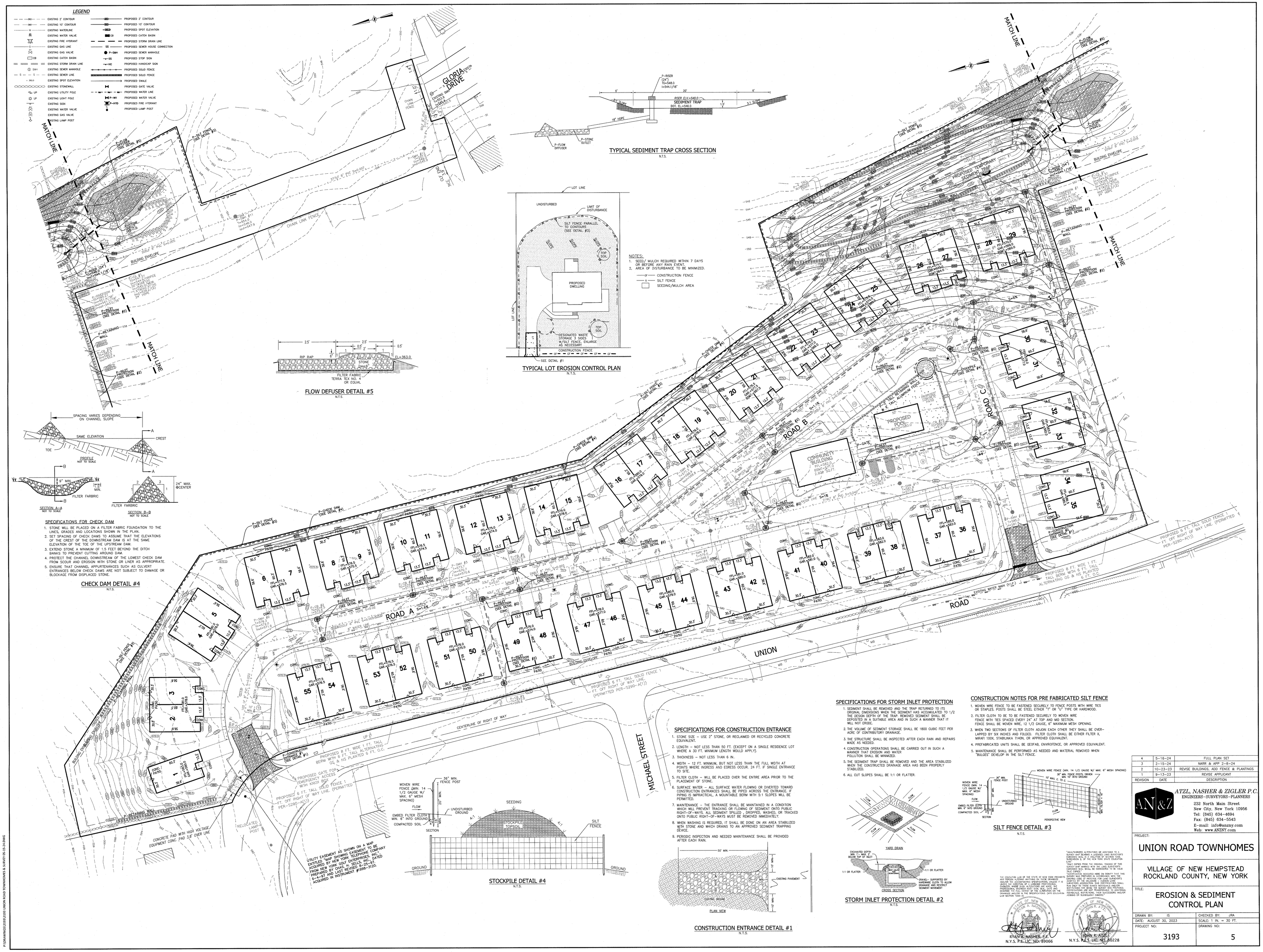

REVISION	DATE	DESCRIPTION
4	5-16-24	FULL PLAN SET
3	2-15-24	NARR & APP 2-8-24
2	10-23-23	REVISE BUILDINGS, ADD FENCE & PLANTINGS
1	9-13-23	REVISE APPLICANT

ATZL, NASHER & ZIGLER P.C.
ENGINEERS-SURVEYORS-PLANNERS
232 North Main Street
New City, New York 10956
Tel: (845) 634-4694
Fax: (845) 634-5543
E-mail: info@anzny.com
Web: www.ANZNY.com

PROJECT:

UNION ROAD TOWNHOMES

VILLAGE OF NEW HEMPSTEAD
ROCKLAND COUNTY, NEW YORK

TITLE:

EROSION & SEDIMENT CONTROL PLAN

DRAWN BY: IS	CHECKED BY: JRA
DATE: AUGUST 30, 2023	SCALE: 1 IN. = 30 FT.
PROJECT NO: 3193	DRAWING NO: 5

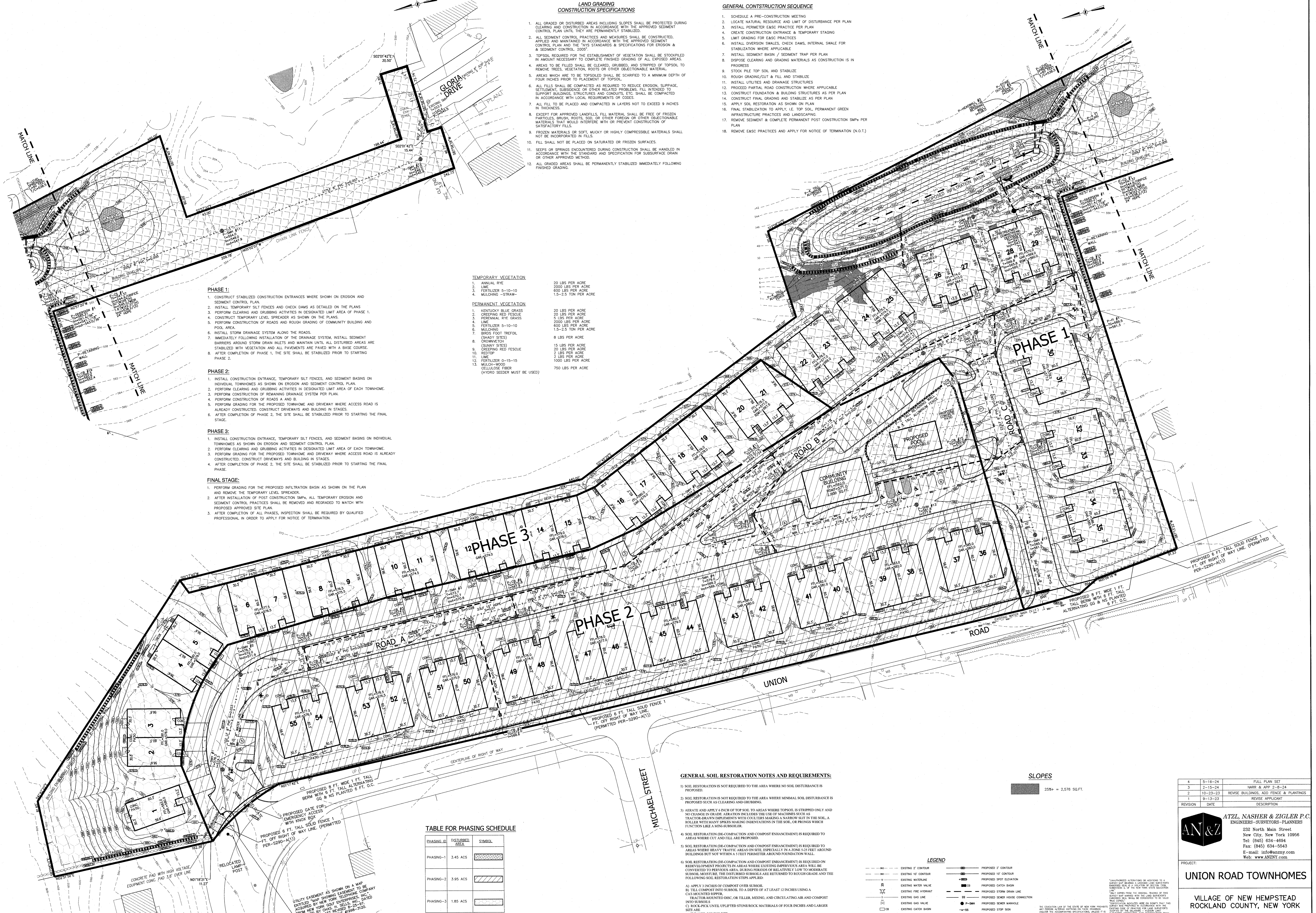

LAND GRADING CONSTRUCTION SPECIFICATIONS

1. ALL GRADED OR DISTURBED AREAS INCLUDING SLOPES SHALL BE PROTECTED DURING CLEARING AND CONSTRUCTION IN ACCORDANCE WITH THE APPROVED SEDIMENT CONTROL PLAN UNTIL THEY ARE PERMANENTLY STABILIZED.
2. ALL SEDIMENT CONTROL PRACTICES AND MEASURES SHALL BE CONSTRUCTED, APPLIED AND MAINTAINED IN ACCORDANCE WITH THE APPROVED SEDIMENT CONTROL PLAN AND THE "NYS STANDARDS & SPECIFICATIONS FOR EROSION & SEDIMENT CONTROL. 2005".
3. TOPSOIL REQUIRED FOR THE ESTABLISHMENT OF VEGETATION SHALL BE STOCKPILED IN AMOUNT NECESSARY TO COMPLETE FINISHED GRADING OF ALL EXPOSED AREAS.
4. AREAS TO BE FILLED SHALL BE CLEARED, GRUBBED, AND STRIPPED OF TOPSOIL TO REMOVE TREES, VEGETATION, ROOTS OR OTHER OBJECTIONABLE MATERIAL.
5. AREAS WHICH ARE TO BE TOPSOILED SHALL BE SCARIFIED TO A MINIMUM DEPTH OF FOUR INCHES PRIOR TO PLACEMENT OF TOPSOIL.
6. ALL FILLS SHALL BE COMPACTED AS REQUIRED TO REDUCE EROSION, SLIPPAGE, SETTLEMENT, SUBSIDENCE OR OTHER RELATED PROBLEMS. FILL INTENDED TO SUPPORT BUILDINGS, STRUCTURES AND CONDUITS, ETC. SHALL BE COMPACTED IN ACCORDANCE WITH LOCAL REQUIREMENTS OR CODES.
7. ALL FILL TO BE PLACED AND COMPACTED IN LAYERS NOT TO EXCEED 9 INCHES IN THICKNESS.
8. EXCEPT FOR APPROVED LANDFILLS, FILL MATERIAL SHALL BE FREE OF FROZEN PARTICLES, BRUSH, ROOTS, SOD, OR OTHER FOREIGN OR OTHER OBJECTIONABLE MATERIALS THAT WOULD INTERFERE WITH OR PREVENT CONSTRUCTION OF SATISFACTORY FILLS.
9. FROZEN MATERIALS OR SOFT, MUCKY OR HIGHLY COMPRESSIBLE MATERIALS SHALL NOT BE INCORPORATED IN FILLS.
10. FILL SHALL NOT BE PLACED ON SATURATED OR FROZEN SURFACES.
11. SEEPS OR SPRINGS ENCOUNTERED DURING CONSTRUCTION SHALL BE HANDLED IN ACCORDANCE WITH THE STANDARD AND SPECIFICATION FOR SUBSURFACE DRAIN OR OTHER APPROVED METHOD.
12. ALL GRADED AREAS SHALL BE PERMANENTLY STABILIZED IMMEDIATELY FOLLOWING FINISHED GRADING.

GENERAL CONSTRUCTION SEQUENCE

1. SCHEDULE A PRE-CONSTRUCTION MEETING
2. LOCATE NATURAL RESOURCE AND LIMIT OF DISTURBANCE PER PLAN
3. INSTALL PERIMETER E&SC PRACTICE PER PLAN
4. CREATE CONSTRUCTION ENTRANCE & TEMPORARY STAGING
5. LIMIT GRADING FOR E&SC PRACTICES
6. INSTALL DIVERSION SWALES, CHECK DAMS, INTERNAL SWALE FOR STABILIZATION WHERE APPLICABLE
7. INSTALL SEDIMENT BASIN / SEDIMENT TRAP PER PLAN
8. DISPOSE CLEARING AND GRADING MATERIALS AS CONSTRUCTION IS IN PROGRESS
9. STOCK PILE TOP SOIL AND STABILIZE
10. ROUGH GRADING/CUT & FILL AND STABILIZE
11. INSTALL UTILITIES AND DRAINAGE STRUCTURES
12. PROCEED PARTIAL ROAD CONSTRUCTION WHERE APPLICABLE
13. CONSTRUCT FOUNDATION & BUILDING STRUCTURES AS PER PLAN
14. CONSTRUCT FINAL GRADING AND STABILIZE AS PER PLAN
15. APPLY SOIL RESTORATION AS SHOWN ON PLAN
16. FINAL STABILIZATION TO APPLY, I.E. TOP SOIL, PERMANENT GREEN INFRASTRUCTURE PRACTICES AND LANDSCAPING.
17. REMOVE SEDIMENT & COMPLETE PERMANENT POST CONSTRUCTION SMPs PER PLAN
18. REMOVE E&SC PRACTICES AND APPLY FOR NOTICE OF TERMINATION (N.O.T.)

PHASE 1:

1. CONSTRUCT STABILIZED CONSTRUCTION ENTRANCES WHERE SHOWN ON EROSION AND SEDIMENT CONTROL PLAN.
2. INSTALL TEMPORARY SILT FENCES AND CHECK DAMS AS DETAILED ON THE PLANS
3. PERFORM CLEARING AND GRUBBING ACTIVITIES IN DESIGNATED LIMIT AREA OF PHASE 1.
4. CONSTRUCT TEMPORARY LEVEL SPREADER AS SHOWN ON THE PLANS.
5. PERFORM CONSTRUCTION OF ROADS AND ROUGH GRADING OF COMMUNITY BUILDING AND POOL AREA.
6. INSTALL STORM DRAINAGE SYSTEM ALONG THE ROADS.
7. IMMEDIATELY FOLLOWING INSTALLATION OF THE DRAINAGE SYSTEM, INSTALL SEDIMENT BARRIERS AROUND STORM DRAIN INLETS AND MAINTAIN UNTIL ALL DISTURBED AREAS ARE STABILIZED WITH VEGETATION AND ALL PAVEMENTS ARE PAVED WITH A BASE COURSE.
8. AFTER COMPLETION OF PHASE 1, THE SITE SHALL BE STABILIZED PRIOR TO STARTING PHASE 2.

PHASE 2:

1. INSTALL CONSTRUCTION ENTRANCE, TEMPORARY SILT FENCES, AND SEDIMENT BASINS ON INDIVIDUAL TOWNHOMES AS SHOWN ON EROSION AND SEDIMENT CONTROL PLAN.
2. PERFORM CLEARING AND GRUBBING ACTIVITIES IN DESIGNATED LIMIT AREA OF EACH TOWNHOME.
3. PERFORM CONSTRUCTION OF REMAINING DRAINAGE SYSTEM PER PLAN.
4. PERFORM CONSTRUCTION OF ROADS A AND B.
5. PERFORM GRADING FOR THE PROPOSED TOWNHOME AND DRIVEWAY WHERE ACCESS ROAD IS ALREADY CONSTRUCTED. CONSTRUCT DRIVEWAYS AND BUILDING IN STAGES.
6. AFTER COMPLETION OF PHASE 2, THE SITE SHALL BE STABILIZED PRIOR TO STARTING THE FINAL STAGE.

PHASE 3:

1. INSTALL CONSTRUCTION ENTRANCE, TEMPORARY SILT FENCES, AND SEDIMENT BASINS ON INDIVIDUAL TOWNHOMES AS SHOWN ON EROSION AND SEDIMENT CONTROL PLAN.
2. PERFORM CLEARING AND GRUBBING ACTIVITIES IN DESIGNATED LIMIT AREA OF EACH TOWNHOME.
3. PERFORM GRADING FOR THE PROPOSED TOWNHOME AND DRIVEWAY WHERE ACCESS ROAD IS ALREADY CONSTRUCTED. CONSTRUCT DRIVEWAYS AND BUILDING IN STAGES.
4. AFTER COMPLETION OF PHASE 2, THE SITE SHALL BE STABILIZED PRIOR TO STARTING THE FINAL PHASE.

FINAL STAGE:

1. PERFORM GRADING FOR THE PROPOSED INFILTRATION BASIN AS SHOWN ON THE PLAN AND REMOVE THE TEMPORARY LEVEL SPREADER.
2. AFTER INSTALLATION OF POST CONSTRUCTION SMPs, ALL TEMPORARY EROSION AND SEDIMENT CONTROL PRACTICES SHALL BE REMOVED AND REGRADED TO MATCH WITH PROPOSED APPROVED SITE PLAN.
3. AFTER COMPLETION OF ALL PHASES, INSPECTION SHALL BE REQUIRED BY QUALIFIED PROFESSIONAL IN ORDER TO APPLY FOR NOTICE OF TERMINATION.

TEMPORARY VEGETATION

1.	ANNUAL RYE	20 LBS PER ACRE
2.	LIME	2000 LBS PER ACRE
3.	FERTILIZER 5-10-10	600 LBS PER ACRE
4.	MULCHING -STRAW-	1.5-2.5 TON PER ACRE

PERMANENT VEGETATION

1.	KENTUCKY BLUE GRASS	20 LBS PER ACRE
2.	CREEPING RED FESCUE	20 LBS PER ACRE
3.	PERENNIAL RYE GRASS	5 LBS PER ACRE
4.	LIME	2000 LBS PER ACRE
5.	FERTILIZER 5-10-10	600 LBS PER ACRE
6.	MULCHING	1.5-2.5 TON PER ACRE
7.	BIRDS FOOT TREFOIL (SHADY SITES)	8 LBS PER ACRE
8.	CROWNVETCH (SUNNY SITES)	15 LBS PER ACRE
9.	CREEPING RED FESCUE	20 LBS PER ACRE
10.	REDTOP	2 LBS PER ACRE
11.	LIME	2 LBS PER ACRE
12.	FERTILIZER 0-15-15	1000 LBS PER ACRE
13.	MULCH-WOOD CELLULOSE FIBER (HYDRO SEEDER MUST BE USED)	750 LBS PER ACRE

TABLE FOR PHASING SCHEDULE

PHASING ID	DISTURBED AREA	SYMBOL
PHASING-1	3.45 ACS	
PHASING-2	3.95 ACS	
PHASING-3	1.85 ACS	

TOTAL AREA OF DISTURBANCE:
9.25 ACS.

GENERAL SOIL RESTORATION NOTES AND REQUIREMENTS:

1) SOIL RESTORATION IS NOT REQUIRED TO THE AREA WHERE NO SOIL DISTURBANCE IS PROPOSED.

2) SOIL RESTORATION IS NOT REQUIRED TO THE AREA WHERE MINIMAL SOIL DISTURBANCE IS PROPOSED SUCH AS CLEARING AND GRUBBING.

3) AERATE AND APPLY 6 INCH OF TOP SOIL TO AREAS WHERE TOPSOIL IS STRIPPED ONLY AND NO CHANGE IN GRADE. AERATION INCLUDES THE USE OF MACHINES SUCH AS TRACTOR-DRAWN IMPLEMENTS WITH COULTERS MAKING A NARROW SLIT IN THE SOIL, A ROLLER WITH MANY SPIKES MAKING INDENTATIONS IN THE SOIL, OR PRONGS WHICH FUNCTION LIKE A MINI-SUBSOILER.

4) SOIL RESTORATION (DE-COMPACTION AND COMPOST ENHANCEMENT) IS REQUIRED TO AREAS WHERE CUT AND FILL ARE PROPOSED.

5) SOIL RESTORATION (DE-COMPACTION AND COMPOST ENHANCEMENT) IS REQUIRED TO AREAS WHERE HEAVY TRAFFIC AREAS ON SITE, ESPECIALLY IN A ZONE 5-25 FEET AROUND BUILDINGS BUT NOT WITHIN A 5 FEET PERIMETER AROUND FOUNDATION WALL.

6) SOIL RESTORATION (DE-COMPACTION AND COMPOST ENHANCEMENT) IS REQUIRED ON REDEVELOPMENT PROJECTS IN AREAS WHERE EXISTING IMPERVIOUS AREA WILL BE CONVERTED TO PERVIOUS AREA. DURING PERIODS OF RELATIVELY LOW TO MODERATE SUBSOIL MOISTURE, THE DISTURBED SUBSOILS ARE RETURNED TO ROUGH GRADE AND THE FOLLOWING SOIL RESTORATION STEPS APPLIED:

A) APPLY 3 INCHES OF COMPOST OVER SUBSOIL.
B) TILL COMPOST INTO SUBSOIL TO A DEPTH OF AT LEAST 12 INCHES USING A CAT-MOUNTED RIPPER, TRACTOR-MOUNTED DISC, OR TILLER, MIXING, AND CIRCULATING AIR AND COMPOST INTO SUBSOILS
C) ROCK-PICK UNTIL UPLIFTED STONE/ROCK MATERIALS OF FOUR INCHES AND LARGER SIZE ARE CLEANED OFF THE SITE
D) APPLY TOPSOIL TO A DEPTH OF 6 INCHES
E) VEGETATE AS REQUIRED BY APPROVED PLAN.

SLOPES

25%+ = 2,576 SQ.FT.

LEGEND

EXISTING		PROPOSED	
EXISTING 2' CONTOUR		PROPOSED 2' CONTOUR	
EXISTING 10' CONTOUR		PROPOSED 10' CONTOUR	
EXISTING WATERLINE		PROPOSED SPOT ELEVATION	
EXISTING WATER VALVE		PROPOSED CATCH BASIN	CB
EXISTING FIRE HYDRANT		PROPOSED STORM DRAIN LINE	
EXISTING GAS LINE		PROPOSED SEWER HOUSE CONNECTION	SS
EXISTING GAS VALVE		PROPOSED SEWER MANHOLE	P-SMH
EXISTING CATCH BASIN	CB	PROPOSED STOP SIGN	SS
EXISTING STORM DRAIN LINE		PROPOSED HANDICAP SIGN	HC
EXISTING SEWER MANHOLE	SMH	PROPOSED SOLID FENCE	
EXISTING SEWER LINE	S	PROPOSED SOLID FENCE	
EXISTING SPOT ELEVATION	+ 360.0	PROPOSED SWALE	
EXISTING STONEWALL		PROPOSED GATE VALVE	
EXISTING UTILITY POLE	UP	PROPOSED WATER LINE	
EXISTING LIGHT POLE	LP	PROPOSED WATER VALVE	P-WV
EXISTING SIGN		PROPOSED FIRE HYDRANT	P-HYD
EXISTING WATER VALVE	WV	PROPOSED LAMP POST	
EXISTING GAS VALVE	GV		
EXISTING LAMP POST			

THE EDUCATION LAW OF THE STATE OF NEW YORK PROHIBITS ANY PERSON ALTERING ANYTHING ON THESE DRAWINGS AND/OR THE ACCOMPANYING SPECIFICATIONS, UNLESS IT IS UNDER THE DIRECTION OF A LICENSED PROFESSIONAL ENGINEER. WHERE SUCH ALTERATIONS ARE MADE, THE PROFESSIONAL ENGINEER MUST SIGN, SEAL, DATE AND DESCRIBE THE FULL EXTENT OF THE ALTERATION ON THE DRAWINGS AND/OR IN THE SPECIFICATIONS. (NYS EDUCATION LAW SECTION 7209-2)

"UNAUTHORIZED ALTERATIONS OR ADDITIONS TO A SURVEY MAP BEARING A LICENSED LAND SURVEYOR'S EMBOSSED SEAL IS A VIOLATION OF SECTION 7209, SUBDIVISION 2, OF THE NEW YORK STATE EDUCATION LAW."
"ONLY COPIES FROM THE ORIGINAL TRACING OF THIS SURVEY MAP MARKED WITH THE LAND SURVEYOR'S EMBOSSED SEAL SHALL BE CONSIDERED TO BE VALID TRUE COPIES."
"CERTIFICATION INDICATED HERE ON SIGNIFY THAT THIS SURVEY WAS PREPARED IN ACCORDANCE WITH THE EXISTING CODE OF PRACTICE FOR LAND SURVEYS ADOPTED BY THE DELAWARE - HUDSON LAND SURVEYORS ASSOCIATION. SAID CERTIFICATIONS SHALL RUN ONLY TO THOSE NAMED INDIVIDUALS AND/OR INSTITUTIONS FOR WHOM THE SURVEY WAS PREPARED. CERTIFICATIONS ARE NOT TRANSFERABLE TO ADDITIONAL INDIVIDUALS, INSTITUTIONS, THEIR SUCCESSORS AND/OR ASSIGNS OR SUBSEQUENT OWNERS."

RYAN A. NASHER, P.E.
N.Y.S. P.E. LIC. NO. 89066

JOHN R. ATZL
N.Y.S. P.L.S. LIC. NO. 50228

REVISION	DATE	DESCRIPTION
4	5-16-24	FULL PLAN SET
3	2-15-24	NARR & APP 2-8-24
2	10-23-23	REVISE BUILDINGS, ADD FENCE & PLANTINGS
1	9-13-23	REVISE APPLICANT

AN&Z
ATZL, NASHER & ZIGLER P.C.
ENGINEERS-SURVEYORS-PLANNERS
232 North Main Street
New City, New York 10956
Tel: (845) 634-4694
Fax: (845) 634-5543
E-mail: info@anzny.com
Web: www.ANZNY.com

PROJECT:
UNION ROAD TOWNHOMES

VILLAGE OF NEW HEMPSTEAD
ROCKLAND COUNTY, NEW YORK

TITLE:
CONSTRUCTION PHASING PLAN

DRAWN BY:	IS	CHECKED BY:	JRA
DATE:	AUGUST 30, 2023	SCALE:	1 IN. = 30 FT.
PROJECT NO:	3193	DRAWING NO:	6

PLANTING SPECIFICATIONS:

GENERAL: ALL PLANTS, TREES, AND SHRUBS SHALL MEET THE SPECIFICATIONS FOR "PLANT MATERIAL" AS PER THE AMERICAN STANDARD FOR NURSERY STOCK. THE LANDSCAPE ARCHITECT RESERVES THE RIGHT TO INSPECT ALL PLANTS PRIOR TO SHIPPING AND INSTALLATION. THERE ARE TO BE NO SUBSTITUTIONS OF THE PLANTS WITHOUT THE CONSENT OF THE LANDSCAPE ARCHITECT.

PLANTING: ALL PLANTS SHALL BE PLANTED IN PITS TWO TIMES THE DIAMETER OF THE ROOT BALL OR CONTAINER. PLANT HEIGHT SHOULD BE PLACED AT OR SLIGHTLY ABOVE PREVIOUS GRADE. PULL BACK BURLAP FROM TOP OF BALL AND CUT WIRE ON TREE BASKET. ENSURE THAT THE BURLAP IS NOT EXPOSED ABOVE GRADE BECAUSE OF WATER LOSS. STAKING AND GUYING SHALL BE USED ONLY WHEN NECESSARY. WHEN THE METHOD IS USED, CARE SHOULD BE TAKEN TO PROTECT THE TREE BARK AND WIRES SHOULD BE REMOVED AS SOON AS POSSIBLE.

MULCHING: ALL PLANTING BEDS (EXCEPT GROUNDCOVER) SHALL BE MULCHED WITH THREE INCHES OF SHREDDED BARK TO CONSERVE WATER AND KEEP ROOTS COVERED DURING INTIAL GROWTH STAGE. DO NOT PLACE MULCH HEAVILY AROUND CROWN OF PLANTS.

WINTER CARE: ALL TREES AND SHRUBS SHALL BE SPRAYED WITH AN ANTI-DESICCANT THE FIRST NOVEMBER AFTER PLANTING.

WATERING: ALL PLANTS SHALL BE WATERED BY THE CONTRACTOR DURING THE INITIAL GROWTH STAGE. TREES, SHALL BE HAVILY WATERED SEVERAL TIMES DURING THE FIRST MONTH AFTER PLANTING AND THEN REGULARLY FOR THE NEXT TWO SUMMERS.

PLANT GUARANTEE: CONTRACTOR SHALL GUARANTEE ALL NEWLY INSTALLED PLANTS FORTWO-YEAR PROVIDED THAT THEY ARE GIVEN PROPER WATERING/CARE AND CONTRACTOR IS NOTIFIED OF UNHEALTHY STRESSED PLANTS IMMEDIATELY. THE TWO YEAR GUARANTEE WILL START AT THE TIME OF THE ISSUANCE OF THE CERTIFICATE OF OCCUPANY.

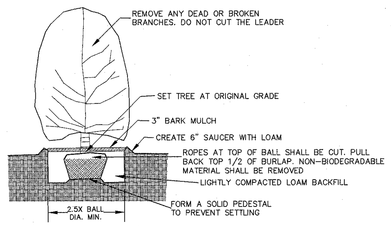

DECIDUOUS TREE PLANTING DETAIL

N.T.S.

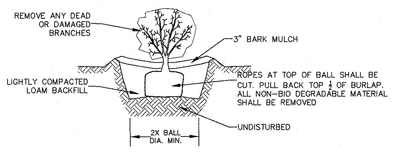

SHRUB PLANTING DETAIL

N.T.S.

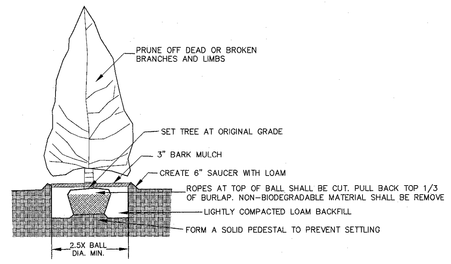

EVERGREEN PLANTING DETAIL

N.T.S.

PLANT LIST

SYMBOL	No.	PLANT NAME	SIZE	QUANTITY
PO	1.	QUERCUS PALUSTRIS Pin Oak	3" CAL.	43
GG	2.	THUJA PLICATA Green Giant Arborvitae	6 FT. TO 7 FT.	108
NS	3.	PICEA ABIES Norway Spruce	6 FT. TO 7 FT.	110
D	4.	COMUS FLORIDA White Flowering Dogwood	6 FT. TO 7 FT.	5
AZ	5.	ASALEA spp 'DEL. VALLEY WHITE' Delaware White Azalea	3 GAL.	54
H	6.	HYDRANGEA macro. 'ENDLESS SUMMER' Endless Summer Hydrangea	5 GAL.	140
J	7.	JUNIPERUS chin. 'HETZZI GLAUCA' Hetzi Juniper	2 FT. TO 3 FT.	70
CL	8.	CRUNUS laurocerasus 'OTTO LUTENS' Cherry Laurel	3 GAL.	50

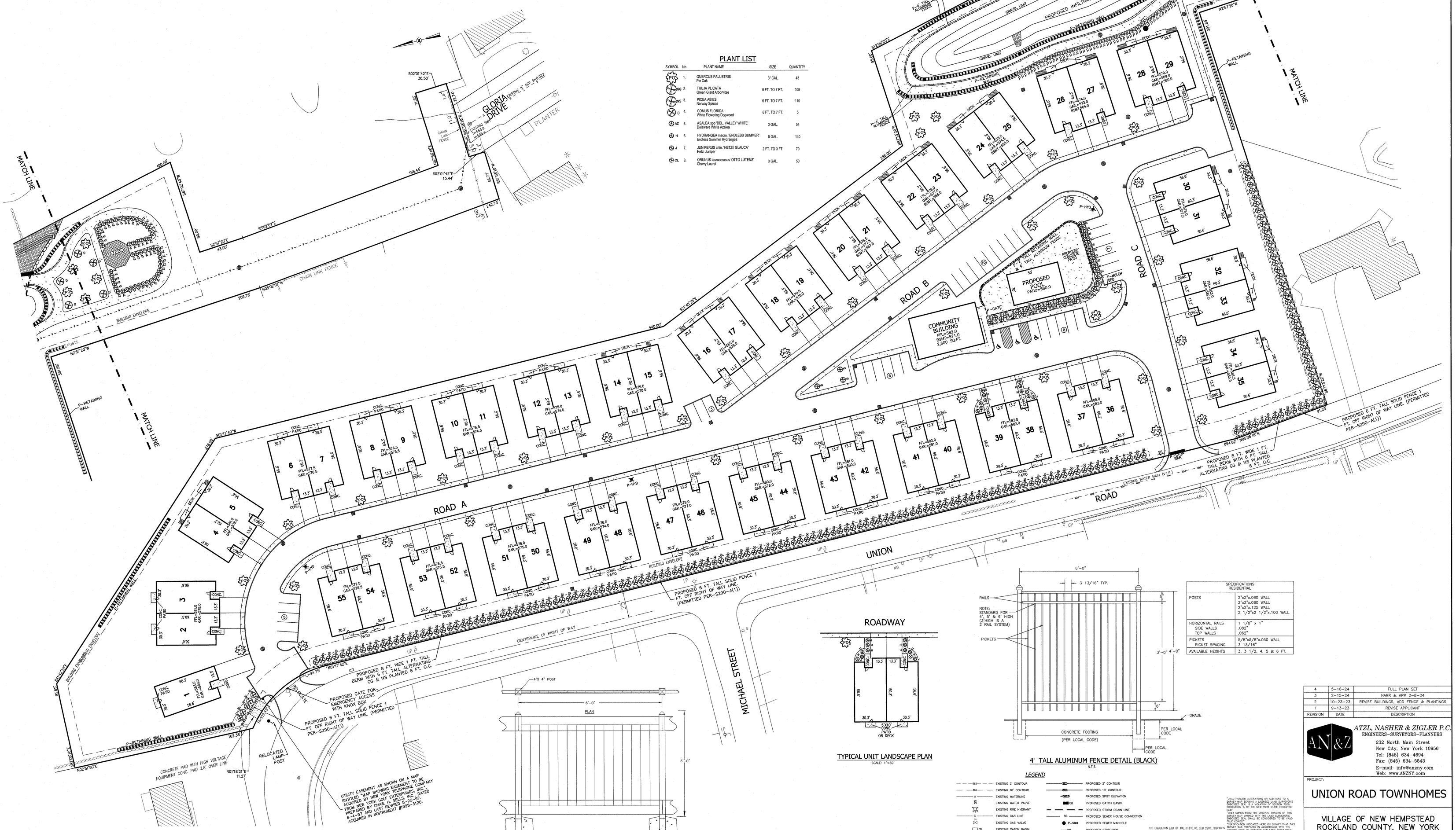

SPECIFICATIONS RESIDENTIAL	
POSTS	2"x2"x.060 WALL 2"x2"x.080 WALL 2"x2"x.125 WALL 2 1/2"x2 1/2"x.100 WALL
HORIZONTAL RAILS	1 1/8" x 1"
SIDE WALLS	.082"
TOP WALLS	.082"
PICKETS	5/8"x5/8"x.050 WALL
PICKET SPACING	3 13/16"
AVAILABLE HEIGHTS	3, 3 1/2, 4, 5 & 6 FT.

"UNAUTHORIZED ALTERATIONS OR ADDITIONS TO A SURVEY MAP OR REPORT BEARING A LICENSED LAND SURVEYOR'S SEAL IS A VIOLATION OF SECTION 7209 SUBDIVISION 2, OF THE NEW YORK STATE EDUCATION LAW."

"ONLY COPIES FROM THE ORIGINAL MAPPING OF THIS SURVEY MAP MARKED WITH THE LAND SURVEYOR'S INKED SEAL SHALL BE CONSIDERED TO BE VALID TRUE COPIES."

"CERTIFICATION INDICATES HERE ON SIGNIFY THAT THIS MAP OR PLAT WAS PREPARED IN ACCORDANCE WITH EXISTING CODE OF PRACTICE FOR LAND SURVEYORS ADOPTED BY THE ASSOCIATED - NYSCEM LAND SURVEYORS COMMITTEE. THE CERTIFICATION SHALL RUN ONLY TO THOSE NAMED INDIVIDUALS AND/OR INSTITUTIONS FOR WHOM THE SURVEY WAS PREPARED, AND TO OTHERS TO WHOM IT MAY BE MADE TO INDIVIDUAL, INSTITUTIONS, THEIR SUCCESSORS AND/OR ASSIGNS OR SUBSEQUENT OWNERS."

THE EDUCATION LAW OF THE STATE OF NEW YORK PROHIBITS ANY PERSON ALTERING ANY PLAN, SPECIFICATION, PLAT OR REPORT UNDER THE DIRECTION OF A LICENSED PROFESSIONAL ENGINEER, LICENSED LAND SURVEYOR, LICENSED LANDSCAPE ARCHITECT OR LICENSED PROFESSIONAL ENGINEER WITHOUT THE SEAL OF THE ARCHITECT, ENGINEER OR LANDSCAPE ARCHITECT TO ALTER THE DOCUMENT. ALTERATIONS TO DOCUMENTS BEARING THE SEAL OF A LICENSED PROFESSIONAL ENGINEER, LICENSED LANDSCAPE ARCHITECT OR LICENSED LAND SURVEYOR MUST INCLUDE THE NAME OF THE PERSON MAKING THE ALTERATION AND THE DATE OF THE ALTERATION ON THE DRAWINGS AND/OR IN THE SPECIFICATIONS (NYS EDUCATION LAW SECTION 7209).

STATE OF NEW YORK — RYAN A. NASHER — 089066

RYAN A. NASHER, P.E.
N.Y.S. P.E. LIC. NO. 89066

STATE OF NEW YORK — JOHN R. ATZL — 80228

JOHN R. ATZL
N.Y.S. P.L.S. LIC. NO. 80228

REVISION	DATE	DESCRIPTION
4	5-16-24	FULL PLAN SET
3	2-15-24	NARR & APP 2-8-24
2	10-23-23	REVISE BUILDINGS, ADD FENCE & PLANTINGS
1	9-13-23	REVISE APPLICANT

ATZL, NASHER & ZIGLER P.C.
ENGINEERS-SURVEYORS-PLANNERS
232 North Main Street
New City, New York 10956
Tel: (845) 634-4694
Fax: (845) 634-5543
E-mail: info@anzny.com
Web: www.ANZNY.com

PROJECT:

UNION ROAD TOWNHOMES

VILLAGE OF NEW HEMPSTEAD
ROCKLAND COUNTY, NEW YORK

TITLE:

LANDSCAPE PLAN

DRAWN BY: JS	CHECKED BY: JRA
DATE: AUGUST 30, 2023	SCALE: 1 IN. = 30 FT.
PROJECT NO: 3193	DRAWING NO: 7

P:\JOBS\ANNOS\3193\3193 UNION ROAD TOWNHOMES & SURVEY 05-15-24.DWG

LEGEND

EXISTING 2' CONTOUR	PROPOSED 2' CONTOUR
EXISTING 10' CONTOUR	PROPOSED 10' CONTOUR
EXISTING WATERLINE	PROPOSED SPOT ELEVATION
EXISTING WATER VALVE	PROPOSED CATCH BASIN
EXISTING FIRE HYDRANT	PROPOSED STORM DRAIN LINE
EXISTING GAS LINE	PROPOSED SEWER HOUSE CONNECTION
EXISTING GAS VALVE	PROPOSED SEWER MANHOLE
EXISTING CATCH BASIN	PROPOSED STOP SIGN
EXISTING STORM DRAIN LINE	PROPOSED HANDICAP SIGN
EXISTING SEWER MANHOLE	PROPOSED SOLID FENCE
EXISTING SEWER LINE	PROPOSED SOLID FENCE
EXISTING SPOT ELEVATION	PROPOSED SWALE
EXISTING STONEWALL	PROPOSED GATE VALVE
EXISTING UTILITY POLE	PROPOSED WATER LINE
EXISTING LIGHT POLE	PROPOSED WATER VALVE
EXISTING SIGN	PROPOSED FIRE HYDRANT
EXISTING WATER VALVE	PROPOSED LAMP POST
EXISTING GAS VALVE	
EXISTING LAMP POST	

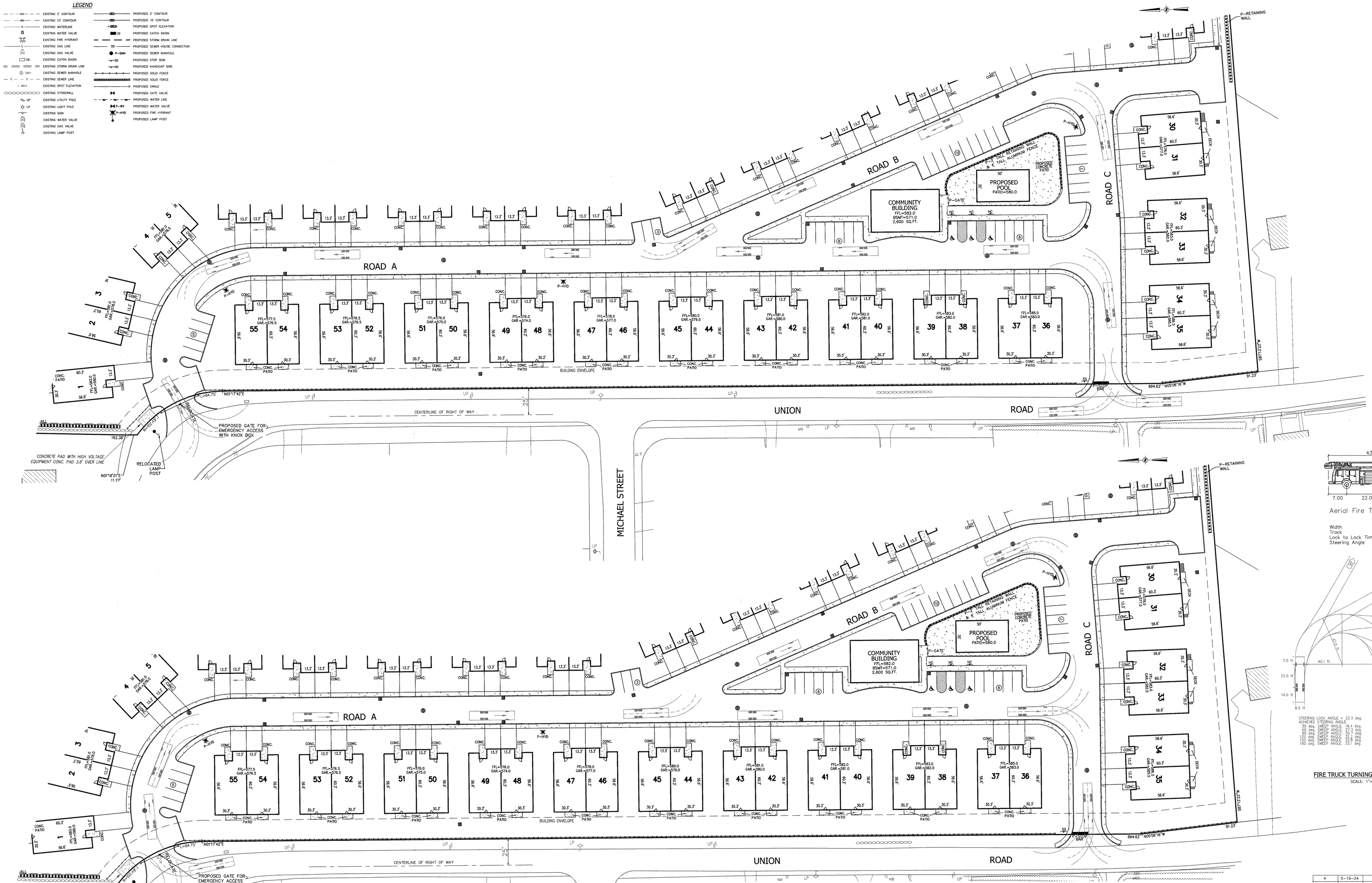

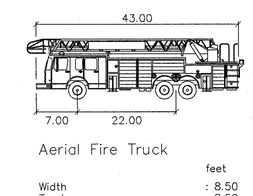

Aerial Fire Truck

	feet
Width	: 8.50
Track	: 8.50
Lock to Lock Time	: 6.0
Steering Angle	: 33.3

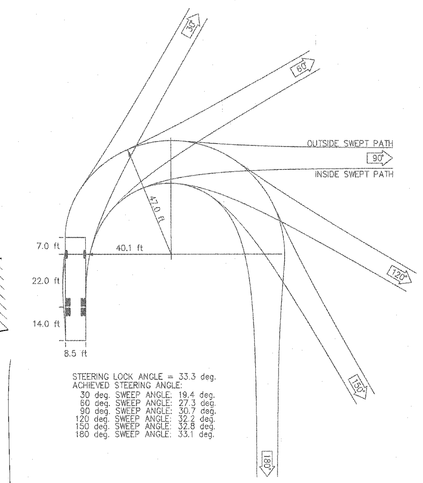

FIRE TRUCK TURNING RADIUS DETAIL

SCALE: 1"=30'

NOTES:
1. 1/4" X 1/2" MOUNTING STRAPS FOR ACCESS ENTRANCE SIGN
2. OWNER PADLOCK
3. FIRE DEPARTMENT PADLOCK.
4. APPROVED NO PARKING SIGNS BACK TO BACK WITH 1/4" X 1/2" MOUNTING STRAPS.
5. FIRE LANE STRIPING AT EACH MANUAL GATE.
6. 2"X2"X.120 RAILS APPROVED COLOR CHROME GATE.
7. WELD MODIFIED L-BRACKET TO GATE FRAME.
8. LOCKING BAR LENGTH IS DETERMINED BY THE FRAME WIDTH AND THE GAP WITH BETWEEN THE TWO GATES.
9. APPROVED FIRE DEPARTMENT ACCESS SIGN BACK TO BACK.

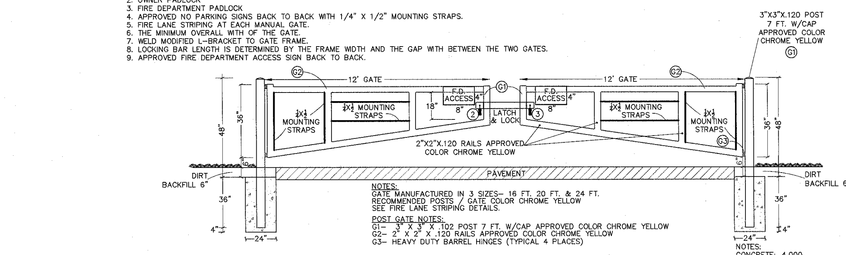

NOTES:
GATE MANUFACTURED IN 3 SIZES- 16 FT, 20 FT, & 24 FT.
RECOMMENDED POSTS: 3" GATE COLOR CHROME YELLOW
SEE FIRE LANE STRIPING DETAILS.

POST GATE NOTES:
G1- 3" X 3" X .120 POST 7 FT. W/CAP APPROVED COLOR CHROME YELLOW
G2- 2" X 2" X .120 RAILS APPROVED COLOR CHROME YELLOW
G3- HEAVY DUTY BARREL HINGES (TYPICAL 4 PLACES)

NOTES:
CONCRETE: 4,000 PSI @ 28 DAYS

EMERGENCY ACCESS GATE DETAIL

N.T.S.

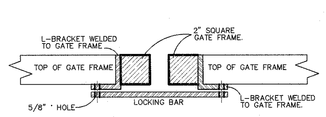

LOCKING BAR DETAIL

N.T.S.

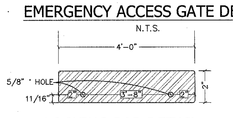

LOCKING BAR DETAIL

N.T.S.

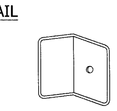

L-BRACKET DETAIL

N.T.S.

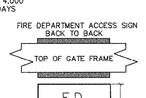

ACCESS SIGN DETAIL

N.T.S.

THE EDUCATION LAW OF THE STATE OF NEW YORK PROHIBITS ANY PERSON ALTERING ANYTHING ON THESE DRAWINGS AND/OR THE ACCOMPANYING SPECIFICATIONS, UNLESS IT IS UNDER THE DIRECTION OF A LICENSED LAND SURVEYOR, ENGINEER, NAMBE SUCH ALTERATIONS ARE MADE. ALL PROFESSIONAL ENGINEER WITH SEAL ALTERING AN ITEM OF A SURVEY MUST ALSO STAMP THE ITEM WITH HIS OR HER SEAL ALTERING AN ITEM DRAWING AND/OR IN THE SPECIFICATIONS (NYS EDUCATION LAW SECTION 7209-2).

"UNAUTHORIZED ALTERATIONS OR ADDITIONS TO A SURVEY MAP OR REPORT A LICENSED LAND SURVEYOR'S EMBOSSED SEAL IS A VIOLATION OF SECTION 7209, SUBDIVISION 2, OF THE NEW YORK STATE EDUCATION LAW."

"ONLY COPIES FROM THE ORIGINAL TRACING OF THIS SURVEY MAP OR REPORT BEARING THE ORIGINAL EMBOSSED SEAL SHALL BE CONSIDERED TO BE VALID TRUE COPIES."

"UNLESS OTHERWISE INDICATED HERE ON, SCOPE OF THIS SURVEY WAS PREPARED IN ACCORDANCE WITH THE EXISTING CODE OF PRACTICE FOR LAND SURVEYORS ADOPTED BY THE NEW YORK STATE ASSOCIATION OF SURVEYORS. ASSOCIATION AND CERTIFICATION SHALL RUN ONLY TO THOSE NAMED INDIVIDUALS AND/OR ENTITIES NAMED HERE ON. THIS SURVEY AND/OR CERTIFICATION ARE NOT TRANSFERABLE TO ADDITIONAL INDIVIDUALS, INSTITUTIONS, THEIR SUCCESSORS AND/OR ASSIGNS OR SUBSEQUENT OWNERS."

RYAN A. NASHER, P.E.
N.Y.S. P.E. LIC. NO. 89066

JOHN R. ATZL
N.Y.S. P.L.S. LIC. NO. 50228

REVISION	DATE	DESCRIPTION
4	5-16-24	FULL PLAN SET
3	2-15-24	NARR & APP 2-8-24
2	10-23-23	REVISE BUILDINGS, ADD FENCE & PLANTINGS
1	9-13-23	REVISE APPLICANT

ATZL, NASHER & ZIGLER P.C.
ENGINEERS-SURVEYORS-PLANNERS
232 North Main Street
New City, New York 10956
Tel: (845) 634-4694
Fax: (845) 634-5543
E-mail: info@anzny.com
Web: www.ANZNY.com

PROJECT:

UNION ROAD TOWNHOMES

VILLAGE OF NEW HEMPSTEAD
ROCKLAND COUNTY, NEW YORK

TITLE:

FIRE TRUCK TURNING PLAN

DRAWN BY: IS	CHECKED BY: JRA
DATE: AUGUST 30, 2023	SCALE: 1 IN. = 30 FT.
PROJECT NO: 3193	DRAWING NO: 8

P:\DRAWINGS\3193\3193 UNION ROAD TOWNHOMES & SURVEY-05-15-24.DWG